CM INDUSTRIES INC.

MANUFACTURER OF QUALITY WELDING PRODUCTS





PRODUCT CATALOG





About CM Industries

What we do:
For over 20 years, CM Industries has been a trusted leader in manufacturing high-performance robotic MIG torches, MIG guns, and consumables. Our commitment to quality ensures superior durability and efficiency for all your welding needs.

Our goal:
At CM Industries, we empower distributors by providing top-tier welding products with industry-leading turnaround times. Our dedicated customer service team is always available to offer expert support tailored to your welding challenges.

We live up to our promise of unparalleled service



AMERICAN MADE WELDING PRODUCTS

ROBOTICS & PERIPHERALS
KOOL RUN®
Driven by Performance

PRODUCTS

- MIG Replacement Parts
- Semi-Automatic MIG Guns
- Push-Pull MIG Guns
- Smoke Extractor MIG Guns
- Automatic MIG Torches
- Robotic MIG Torches
- Nozzle Cleaning Stations
- TIG Torches and Parts
- Water Coolers



CM INDUSTRIES® INC.

505 Oakwood Road, Suite 120
Lake Zurich, IL 60047 USA

sales@cmindustries.com
Phone: 847-550-0033
cmindustries.com

MADE IN THE USA BY CM INDUSTRIES

Table of Contents

Consumables

CM Industries® Kool Run® Taper-LOCK..... 6-7
Bernard® Centerfire..... 8
Bernard®/Tregaskiss® Tough Lock..... 9-11
Bernard® Quik Tip..... 12
Bernard® Elliptical..... 13
Lincoln Magnum® Pro..... 14
MK Products®..... 15
Miller® FasTip..... 16

MIG Guns Semi-Automatic

Gun Configurators for B & T Series..... 18-19
Factory Installed Consumables for B & T Series..... 20-21

Bernard® style replacement MIG torches

B200..... 22-23
B300..... 24-25
B400..... 26-27
B500..... 28-29
BND 300-G..... 30-31
BND 400-H..... 32-33
BND 600-F..... 34-35

Bernard® / Tregaskiss® style replacement MIG torches

T250..... 36-37
T300..... 38-39
T400..... 40-41
T500..... 42-43
T600..... 44-45

Binzel® style replacement MIG torches

BNZ 14A & 15A..... 46-47
BNZ 24A..... 48-49
BNZ 25A..... 50-51
BNZ 26A..... 52-53
BNZ 36A..... 54-55
BNZ 501W..... 56-57
PPA26..... 58-59
PPW401..... 60-61
SM25A..... 62-63
SM36A..... 64-65

Miller® style replacement MIG torches

H10..... 66
M10 & M15..... 67
M25..... 68
M100 & M150..... 69

Tregaskiss® style replacement MIG torches

TRG 450W..... 70-71

All reference to genuine manufacture's equipment numbers, and/or trade names or trademarks are for identification and convenience only.
The trademarks and trade names are the property of their respective owners. ® Indicates a registered trade name or product name, that is the property of the above-named companies.

Tweco® style replacement MIG torches
TWC 160..... 72-73
TWC 180..... 74-75
TWC 200..... 76-77
TWC 250..... 78-79
250 AMP HD Profax style..... 80-81
TWC 250SM..... 82-83
TWC 300..... 84-85
TWC 350SM..... 86-87
TWC 400..... 88-89
400 AMP HD Profax style..... 90-91
TWC 450SM..... 92-93
TWC 500..... 94-95
TWC 550SM..... 96-97

MIG Guns Automatic

Binzel® style replacement MIG torches
BNZ 501AUTO..... 100-101

Tregaskiss® style replacement MIG torches
TRG 400AUTO..... 102-103
TRG 500AUTO..... 104-105
TRG 450W AUTO..... 106-107

Tweco® style replacement MIG torches
TWC 400AUTO..... 108
TWC 500AUTO..... 109

Robotics

KR502..... 112-115
KR502HW..... 116-123
Neck Checking Fixture..... 124
WC95E..... 125
Auto Reamer AR2200..... 126-129
G1..... 130-132
LSR Cables..... 133

TIG Torches

9 Series..... 136-137
17 Series..... 138-139
18 Series..... 140-141
20 Series..... 142-143
22 Series..... 144-145
24 Series..... 146-147
26 Series..... 148-149
12 Series..... 150
25 Series..... 151
27 Series..... 152

Water Coolers

Water Coolers..... 154
Water Hose Ext. Kits..... 155

All reference to genuine manufacture's equipment numbers, and/or trade names or trademarks are for identification and convenience only.
The trademarks and trade names are the property of their respective owners. ® Indicates a registered trade name or product name, that is the property of the above-named companies.

Consumables

Common Direct Replacement Parts

Centerfire™

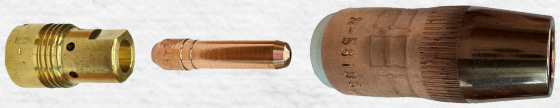

FasTip™



Magnum® Pro



Quik Tip™



Tough Lock™

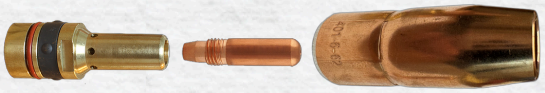

CM Industries offers an extensive variety of replacement parts, manufactured using high quality raw materials and the latest CNC equipment to ensure the highest level of quality and performance for the following brands:

- Bernard®
- Binzel®
- ESAB®
- Fronius®
- Lincoln®
- Miller®
- MK® Products
- OTC Daihen®
- Panasonic®
- SKS®
- Tokin®
- Tregaskiss®
- Tweco®

Seamless AccuLock™ Alternative

- CM Industries' Kool Run® Taper-LOCK™ consumables match MDX™ AccuLock™ and Bernard® AccuLock™ in precision and performance
- Unmatched value - 50% tighter tip tolerance and OEM-level quality at a cost-effective price

CM Taper-LOCK™ Substitution for Bernard® and MDX™ AccuLock™



More consumables available — Contact us for details

CM Kool Run® Taper-LOCK™ Consumables

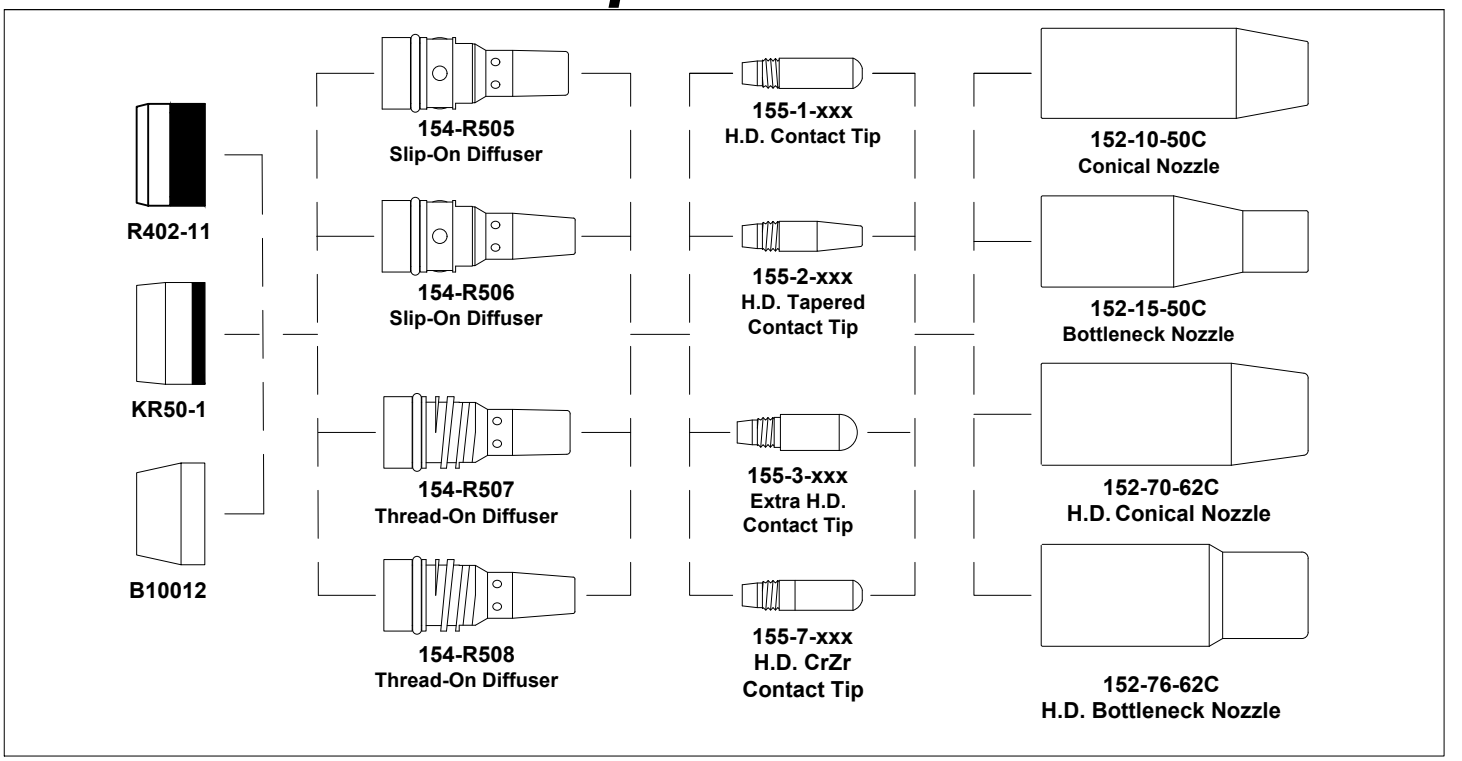

Contact Tips

Wire Size	Heavy-Duty	Heavy-Duty Tapered	Extra Heavy-Duty	Heavy-Duty CrZr
.030" (0.8mm)	155-1-030	155-2-030	155-3-030	155-7-030
.035" (0.9mm)	155-1-035	155-2-035	155-3-035	155-7-035
.040" (1.0mm)	155-1-040	155-2-040	-	155-7-040
.045" (1.2mm)	155-1-045	155-2-045	155-3-045	155-7-045
3/64" (1.2mm)	155-1-364	155-2-364	155-3-364	-
.052" (1.4mm)	155-1-052	155-2-052	155-3-052	-
1/16" (1.6mm)	155-1-062	155-2-062	155-3-062	-
.070" (1.8mm)	155-1-1.8	155-2-1.8	-	-
5/64" (2.0mm)	155-1-564	-	155-3-564	-
3/32" (2.4mm)	155-1-332	-	155-3-332	-

Diffusers

MIG Gun	Heavy-Duty	Tapered (Robotic)	Heavy-Duty	Tapered (Robotic)	Insulator Required
	For Slip-On Nozzles		For Thread-On Nozzles		
CM KOOL RUN - Robotics	154-R505	154-R506	154-R507	154-R508	KR50-1
CM KOOL RUN - Optional Copper	154-R505C	154-R506C	154-R507C	154-R508C	KR50-1
Bernard - B, O, & T Series	154-R505	154-R506	154-R507	154-R508	B10012 (For B & O) R402-11 (For T)
Bernard - AccuLock (Rear Load)	154-ARL5	-	154-ARL7	-	B10012
Bernard - AccuLock (Front Load)	154-AFL5	-	154-AFL7	-	B10012
Bernard - Old, Tapered Thread	154-B505	-	154-B507	-	B10012
Abicor Binzel - Abirob A360	-	154-Z306	-	154-Z308	154-Z3
Abicor Binzel - Abirob A500	154-Z505	154-Z506	154-Z507	154-Z508	154-Z1
Lincoln Magnum Pro Series	154-L505	154-L506	154-L507	154-L508	B10012
Miller - M25	154-M505	-	-	-	B10012
Miller - MDX AccuLock	154-MDX5	-	154-MDX7	-	B10012
Tregaskiss - ALL	154-R505	154-R506	154-R507	154-R508	R402-11
Tweco - Eliminator	154-TE505	-	154-TE507	-	C66J-3

COPYRIGHT © 2025 CM INDUSTRIES, INC. ALL RIGHTS RESERVED

Nozzles - Slip-On

Copper nozzles listed (C). Substitute (P) for plated or (B) for Brass.

Slip-On Nozzles					
Style	**Size (I.D.)**	**1/8" Recess**	**Flush Tip**	**1/8" Stickout**	**1/4" Stickout**
Std. Duty - Conical	3/8"	-	152-12-38C	-	-
	1/2"	152-10-50C	152-12-50C	152-13-50C	152-14-50C
	5/8"	152-10-62C	152-12-62C	152-13-62C	152-14-62C
Std. Duty - Tapered	3/8"	152-19-38B *(1/16" Rec.)*	-	-	-
Std. Duty - Bottleneck	1/2"	152-15-50C	152-16-50C	152-17-50C	152-18-50C
Heavy Duty - Conical	1/2"	152-30-50C	152-32-50C	152-33-50C	-
	5/8"	152-30-62C	152-32-62C	152-33-62C	152-34-62C
	3/4"	152-30-75C	152-32-75C	152-33-75C	-
Heavy Duty - Bottleneck	5/8"	152-35-62C	152-36-62C	152-37-62C	152-38-62C
H.D. Heavy Wall - Bottleneck	5/8"	152-35-62HC	152-36-62HC	152-37-62HC	152-38-62HC

Nozzles - Thread-On

Copper nozzles listed (C). Substitute (P) for plated or (B) for Brass.

Thread-On Nozzles					
Style	**Size (I.D.)**	**1/8" Recess**	**Flush Tip**	**1/8" Stickout**	**1/4" Stickout**
Std. Duty - Conical	3/8"	-	152-62-38C	-	-
	1/2"	152-60-50C	152-62-50C	152-63-50C	152-64-50C
	5/8"	152-60-62C	152-62-62C	152-63-62C	152-64-62C
Std. Duty - Bottleneck	1/2"	152-65-50C	152-66-50C	152-67-50C	152-68-50C
Heavy Duty - Conical	1/2"	152-70-50C	152-72-50C	152-73-50C	-
	5/8"	152-70-62C	152-72-62C	152-73-62C	152-74-62C
	3/4"	152-70-75C	152-72-75C	152-73-75C	-
Heavy Duty - Bottleneck	5/8"	152-75-62C	152-76-62C	152-77-62C	152-78-62C
H.D. Heavy Wall - Bottleneck	5/8"	152-75-62HC	152-76-62HC	152-77-62HC	152-78-62HC

Tight Access Consumables

Slip-On Diffuser

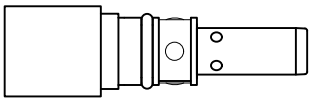

Part Number	Description	Nozzle Type	Material
154-TA506	Diffuser	Slip-On	Brass

Thread-On Diffuser

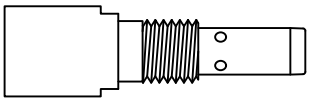

Part Number	Description	Nozzle Type	Material
154-TA508	Diffuser	Thread-On	Brass

Slip-On Nozzle

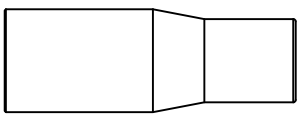

Part Number	Size (I.D.)	Nozzle Type	Material
152-53-50C	1/2"	Flush Tip	Copper
152-53-56C	9/16"	Flush Tip	Copper
152-53-62C	5/8"	Flush Tip	Copper
152-54-50C	1/2"	1/8" Recess	Copper
152-54-56C	9/16"	1/8" Recess	Copper
152-54-62C	5/8"	1/8" Recess	Copper

Thread-On Nozzle

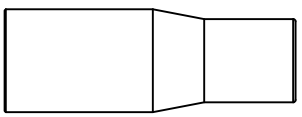

Part Number	Size (I.D.)	Nozzle Type	Material
152-55-50C	1/2"	Flush Tip	Copper
152-55-56C	9/16"	Flush Tip	Copper
152-55-62C	5/8"	Flush Tip	Copper
152-56-50C	1/2"	1/8" Recess	Copper
152-56-56C	9/16"	1/8" Recess	Copper
152-56-62C	5/8"	1/8" Recess	Copper

COPYRIGHT © 2025 CM INDUSTRIES, INC. ALL RIGHTS RESERVED

Small Centerfire™ Diffusers & Nozzles

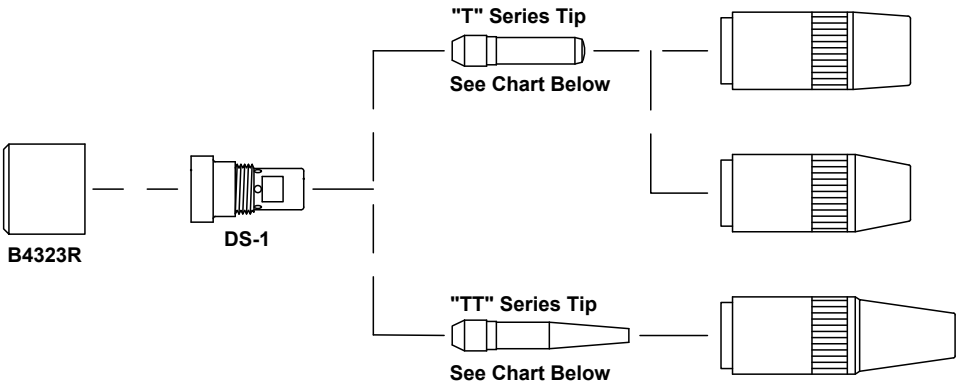

NS-5800C 5/8" I.D. Flush, Copper
NS-5818C 5/8" I.D. 1/8" Rec, Copper
NS-5800B 5/8" I.D. Flush, Brass
NS-5818B 5/8" I.D. 1/8" Rec, Brass

NS-1218C 1/2" I.D. 1/8" Rec, Copper
NS-1200B 1/2" I.D. Flush, Brass
NS-1218B 1/2" I.D. 1/8" Rec, Brass

NST-3800B 3/8" I.D. Flush, Brass
NST-3818B 3/8" I.D. 1/8" Rec, Brass
NST-38XTB 3/8" I.D. 1/8" Ext, Brass

Large Centerfire™ Diffusers & Nozzles

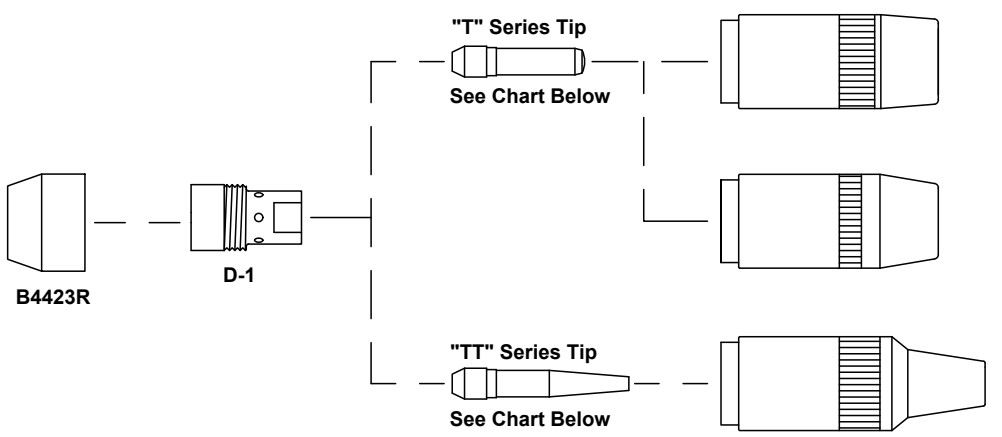

N-3400C 3/4" I.D. Flush, Copper
N-3418C 3/4" I.D. 1/8" Rec, Copper
N-3414C 3/4" I.D. 1/4" Rec, Copper
N-3418B 3/4" I.D. 1/8" Rec, Brass
N-3414B 3/4" I.D. 1/4" Rec, Brass

N-5800C 5/8" I.D. Flush, Copper
N-5818C 5/8" I.D. 1/8" Rec, Copper
N-5814C 5/8" I.D. 1/4" Rec, Copper
N-5818B 5/8" I.D. 1/8" Rec, Brass
N-5814B 5/8" I.D. 1/4" Rec, Brass

NT-3800C 3/8" I.D. Flush, Copper

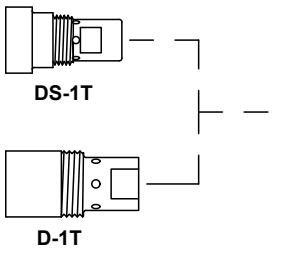

Use with Tweco® Gun

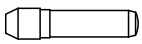

"T" Series Sizes

T-030	.030"	0.8mm
T-035	.035"	0.9mm
T-039	.039"	1.0mm
T-045	.045"	1.2mm
T-047AL	3/64"	1.3mm
T-052	.052"	1.4mm
T-062	1/16"	1.6mm
T-078	5/64"	2.0mm
T-094	3/32"	2.4mm

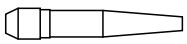

"TT" Series Sizes

TT-030	.030"	0.8mm
TT-035	.035"	0.9mm
TT-039	.039"	1.0mm
TT-045	.045"	1.2mm
TT-052	.052"	1.4mm
TT-062	1/16"	1.6mm

COPYRIGHT © 2025 CM INDUSTRIES, INC. ALL RIGHTS RESERVED

Heavy Duty (HD) Tough Lock™ Series

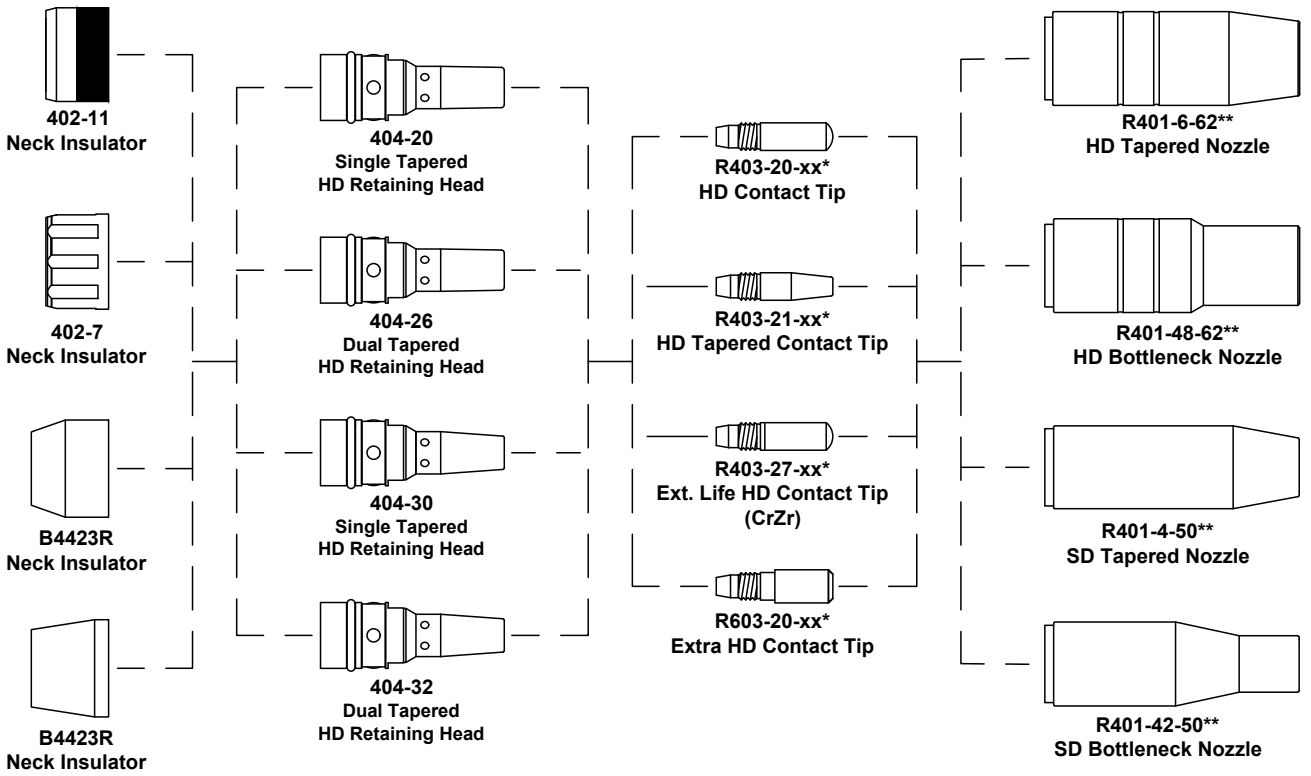

Standard Duty (SD) Tough Lock™ Series

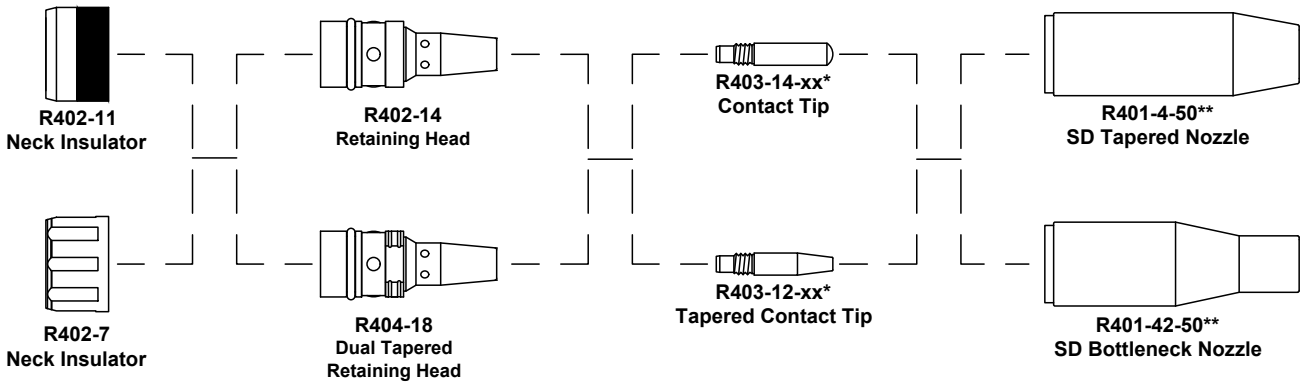

***xx = Wire Size, See Contact Tip information on page 10**
****Additional nozzles are available with various stickouts, see page 11**

COPYRIGHT © 2025 CM INDUSTRIES, INC. ALL RIGHTS RESERVED

Heavy Duty Tough Lock™ Series

Heavy Duty Contact Tips

Wire Size	Heavy-Duty	Heavy-Duty Tapered	Extended Life CrZr	Extra Heavy-Duty
.030" (0.8mm)	R403-20-30	R403-21-30	R403-27-30	Upon request
.035" (0.9mm)	R403-20-35	R403-21-35	R403-27-35	Upon request
.040" (1.0mm)	R403-20-1.0	R403-21-1.0	R403-27-1.0	-
.045" (1.2mm)	R403-20-45	R403-21-45	R403-27-45	R603-20-45
3/64" (1.2mm)	R403-20-364	-	-	R603-20-364
.052" (1.3mm)	R403-20-52	R403-21-52	-	R603-20-52
1/16" (1.6mm)	R403-20-116	R403-21-116	-	R603-20-116
.070" (1.8mm)	R403-20-1.8	-	-	-
5/64" (2.0mm)	R403-20-564	-	-	R603-20-564
3/32" (2.4mm)	R403-20-332	-	-	R603-20-332

Heavy Duty Retaining Heads for Slip-On Nozzles

Part Number	Description	Notes
R404-20	Retaining Head	Single taper HD
R404-22	Retaining Head	Single taper, set screw for liner retention
R404-26	Ret. Head, Dual Taper	Standard dual taper
R404-30	Retaining Head	Standard robotic single taper
R404-32	Ret. Head, Dual Taper	Standard robotic dual taper
R404-44	Retaining Head	Bernard® legacy neck conversion
R404-36	Retaining Head	Single taper robotic - Copper

Heavy Duty Retaining Heads for Thread-On Nozzles

Part Number	Description	Notes
R404-52	Ret. Head, Dual Taper	Standard thread-on robotic
R404-53	Ret. Head, Dual Taper	Standard thread-on semi-automatic

Standard Duty Tough Lock™ Series

Std. Duty Contact Tips

Wire Size	Standard-Duty	Standard-Duty Tapered
.030" (0.8mm)	R403-14-30	R403-12-30
.035" (0.9mm)	R403-14-35	R403-12-35
.045" (1.2mm)	R403-14-45	R403-12-45

Std. Duty Retaining Heads For Slip-On Nozzles

Part Number	Description	Notes
R154-14	Retaining Head	Single taper SD, used on 180 amp TGX Guns
R404-14	Retaining Head	Single taper, std duty
R404-18	Ret. Head, Dual Taper	Dual taper, std duty

COPYRIGHT © 2025 CM INDUSTRIES, INC. ALL RIGHTS RESERVED

Nozzles

AIR-COOLED NOZZLES (SLIP-ON)							
For use with TOUGH LOCK® Diffuser 404-32 (Robotic) or 404-26 (Semi-Automatic)							
Material	**Style**	**Size (I.D.)**	**1/4" Recess**	**1/8" Recess**	**Flush Tip**	**1/8" Stickout**	**1/4" Stickout**
Copper	Std. Duty - Conical	3/8"	-	-	R401-4-38	-	-
		1/2"	-	R401-4-50	-	-	-
		5/8"	-	R401-4-62	-	R401-8-62	R401-44-62
		3/4"	-	R401-4-75	-	-	-
	Std. Duty - Bottleneck	1/2"	-	R401-42-50C		R401-48-50C	R401-44-50C
	Heavy Duty - Conical	1/2"	R401-5-50	R401-6-50	-	-	-
		5/8"	R401-5-62	R401-6-62	-	R401-81-62	-
		3/4"	R401-5-75	R401-6-75	-	-	-
	Heavy Duty - Bottleneck	5/8"	R401-50-62 *(5mm Rec)*	-	R401-48-62	R401-49-62	-
Brass	Std. Duty - Tappered	3/8"	-	R401-40-38 *(1/16" Rec)*		-	-
	Std. Duty - Bottleneck	1/2"	-	R401-42-50	R401-49-50	R401-48-50	R401-44-50
	Heavy Duty - Conical	9/16"	-	R401-87-56	-	-	-
		5/8"	R401-7-62	R401-72-62	R401-88-62	R401-87-62	-
		3/4"	-	R401-7-75	-	-	-
	HD - Conical w/ Straight Bore	5/8"		R401-71-62	-	R401-91-62	R401-92-62
	Heavy Duty - Bottleneck	5/8"	-	-	R401-51-62	-	-
	Heavy Duty - Straight	7/8"	R401-7-87	-	-	-	-

AIR-COOLED NOZZLES (THREAD-ON)							
For use with TOUGH LOCK® Diffuser 404-52 (Robotic) or 404-53 (Semi-Automatic)							
Material	**Style**	**Size (I.D.)**	**1/4" Recess**	**1/8" Recess**	**Flush Tip**	**1/8" Stickout**	**1/4" Stickout**
Copper	Std. Duty - Conical	3/8"	-	R401-42-38	-	-	-
		5/8"	-	R401-43-62	-	R401-18-62	-
	Heavy Duty - Conical	5/8"	-	R401-14-62	-	-	-
Brass	Heavy Duty - Conical	3/4"	-	R401-41-75	-	R401-41-62	-

TOUGH ACCESS® NOZZLES							
For use with TOUGH LOCK® Diffuser 404-50 (H.D.) or 404-54 (Std. Duty)							
Material	**Style**	**Size (I.D.)**	**1/4" Recess**	**1/8" Recess**	**Flush Tip**	**1/8" Stickout**	**1/4" Stickout**
Copper	Std. Duty - Straight Bore	5/8"	-	R401-54-62	R401-55-62	R401-56-62	-
	Std. Duty - Bottleneck (Tapered Inside Bore)	1/2"	-	-	R401-55-50	R401-56-50	R401-57-50

NOZZLES & RETAINING HEADS							
For use with TOUGH LOCK® Diffuser 454-1 on old version - 450 amp Water-Cooled T-Gun™							
Material	**Style**	**Size (I.D.)**	**1/4" Recess**	**1/8" Recess**	**Flush Tip**	**1/8" Stickout**	**1/4" Stickout**
Copper	Std. Duty - Conical	5/8"	R451-5-62	R451-6-62	-	R451-8-62	-
	Heavy Duty - Conical	5/8"	R451-1-62	R451-81-62	R451-61-62	-	-
		3/4"	R451-1-75	-	-	-	-

COPYRIGHT © 2025 CM INDUSTRIES, INC. ALL RIGHTS RESERVED

Nozzles - Thread-On

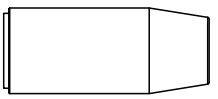

N1B34Q 3/4", Brass
N1B58Q 5/8", Brass

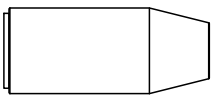

N1C12Q 1/2", Plated

Contact Tips



"T1xxx" Series
See Chart Below

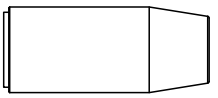

N1C58Q 5/8", Plated



N1C34Q 3/4", Plated

Diffusers

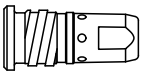

Thread-On
D118Q
1/8" Recess
D114Q
1/4" Recess
D1FQ
Flush

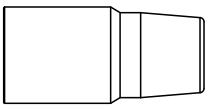

N1C58HQ 5/8", Plated, H.D.

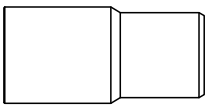

N1C34HQ 3/4", Plated, H.D.

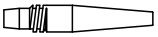

"T2xxx" Series
See Chart Below

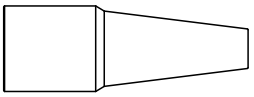

N2C38HQ 3/8", Plated

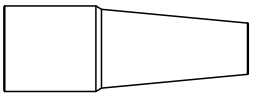

N2C12HQ 1/2", Plated

Insulators

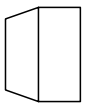

B4423R

Nozzles - Slip-On

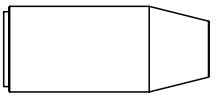

N1C12 1/2", Copper

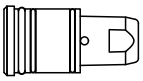

Slip-On
D118
1/8" Recess
D114
1/4" Recess
D1F
Flush

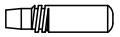

"T1xxx" Series
See Chart Below

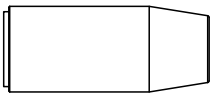

N1C58 5/8", Copper



N1C34 3/4", Copper

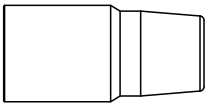

N1C58HD 5/8", Plated, H.D.

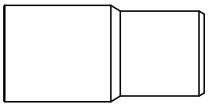

N1C34HD 3/4", Plated, H.D.

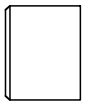

B4323R

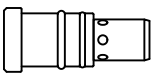

Slip-On
D218
1/8" Recess

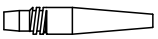

"T2xxx" Series
See Chart Below

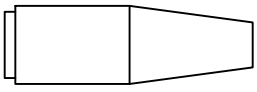

N2C38 3/8", Copper

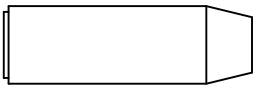

N2C12 1/2", Copper



T1xxx Series Sizes

T1030	.030"	0.8mm
T1035	.035"	0.9mm
T1039	.039"	1.0mm
T1045	.045"	1.2mm
T1364	3/64"	1.3mm
T1052	.052"	1.4mm
T1116	1/16"	1.6mm
T1564	5/64"	2.0mm
T1332	3/32"	2.4mm

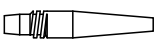

T2xxx Series Sizes

T2030	.030"	0.8mm
T2035	.035"	0.9mm
T2039	.039"	1.0mm
T2045	.045"	1.2mm
T2364	3/64"	1.3mm
T2052	.052"	1.4mm
T2116	1/16"	1.6mm

COPYRIGHT © 2025 CM INDUSTRIES, INC. ALL RIGHTS RESERVED

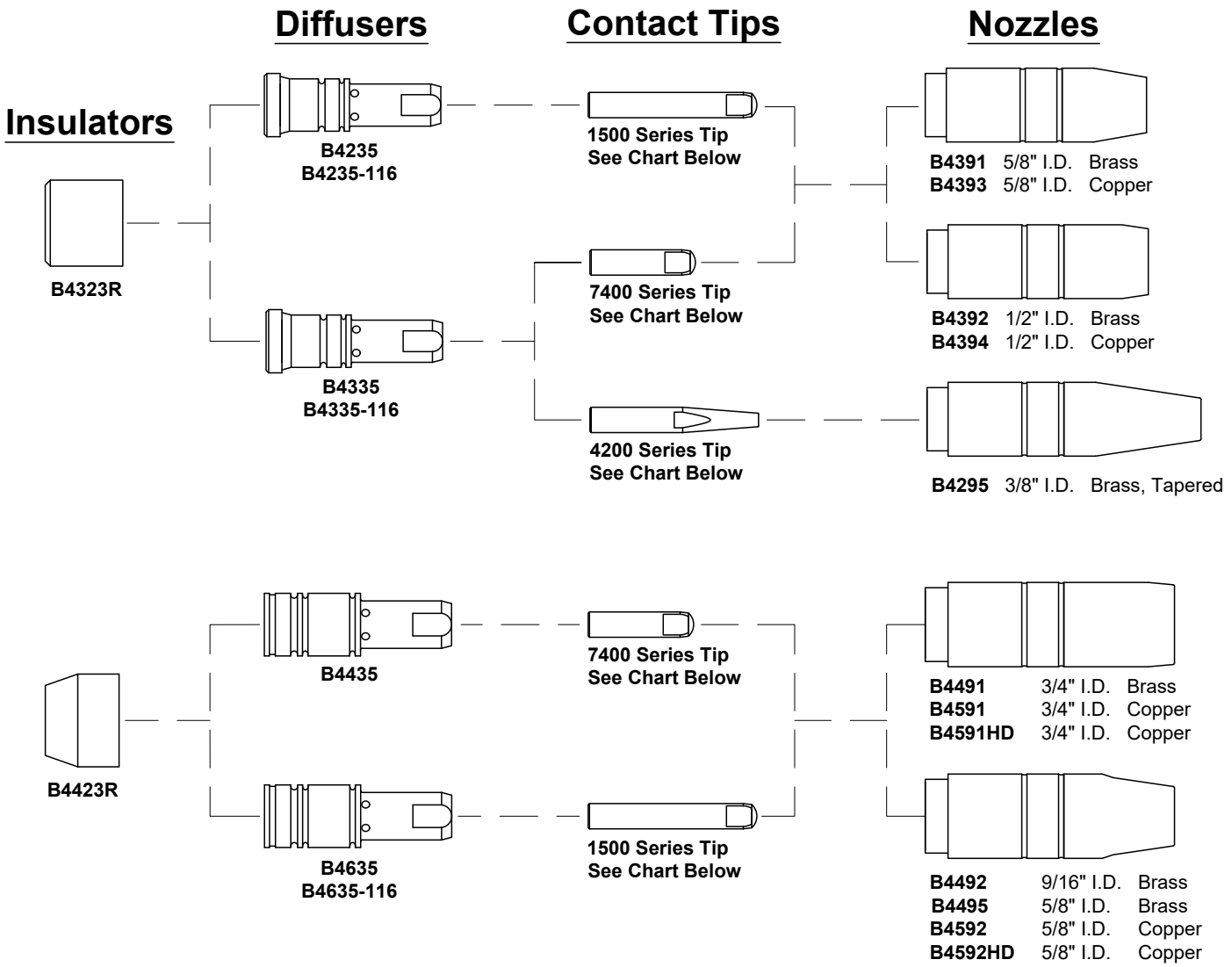

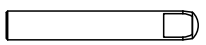

1500 Series Tip

B1597	.023"	(0.6 mm)
B1588	.030"	(0.8 mm)
B1589	.035"	(0.9 mm)
B1596	.039"	(1.0 mm)
B1590	.045"	(1.2 mm)
B1598	.052"	(1.4 mm)
B1591	1/16"	(1.6 mm)
B1592	5/64"	(2.0 mm)
B1593	3/32"	(2.4 mm)
B1594	7/64"	(2.8 mm)

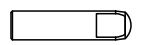

7400 Series Tip

B7497	.023"	(0.6 mm)
B7488	.030"	(0.8 mm)
B7489	.035"	(0.9 mm)
B7496	.039"	(1.0 mm)
B7490	.045"	(1.2 mm)
B7498	.052"	(1.4 mm)
B7491	1/16"	(1.6 mm)
B7492	5/64"	(2.0 mm)
B7493	3/32"	(2.4 mm)
B7494	7/64"	(2.8 mm)

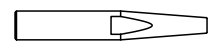

4200 Series Tip

B4285	.030"	(0.8 mm)
B4281	.035"	(0.9 mm)
B4282	.045"	(1.2 mm)
B4283	.052"	(1.4 mm)
B4280	1/16"	(1.6 mm)

COPYRIGHT © 2025 CM INDUSTRIES, INC. ALL RIGHTS RESERVED

Diffusers

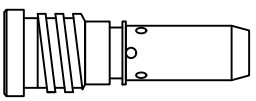

KP2747-1

Contact Tips

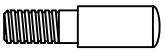

KP2745-xxx
See Chart Below

Nozzles

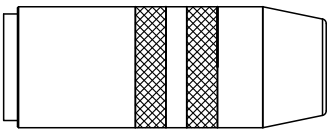

KP2743-1-62R
KP2743-1-75R

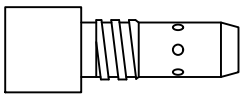

KP2746-1



KP2744-xxx
See Chart Below

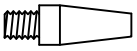

KP2744-xxxT
See Chart Below

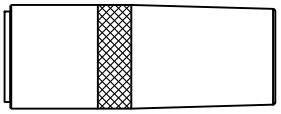

KP2742-1-38R
KP2742-1-38F

KP2742-1-50R
KP2742-1-50F

KP2742-1-62R
KP2742-1-62F

KP3160-1-50R



KP2744-xxx Series Tip

KP2744-030	.030"	(0.8 mm)
KP2744-035	.035"	(0.9 mm)
KP2744-040	.040"	(1.0 mm)
KP2744-045	.045"	(1.2 mm)
KP2744-052	.052"	(1.4 mm)
KP2744-116	1/16"	(1.6 mm)
KP2744-564	5/64"	(2.0 mm)

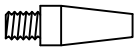

KP2744-xxxT Series Tip

KP2744-030T	.030"	(0.8 mm)
KP2744-035T	.035"	(0.9 mm)
KP2744-040T	.040"	(1.0 mm)
KP2744-045T	.045"	(1.2 mm)
KP2744-052T	.052"	(1.4 mm)
KP2744-116T	1/16"	(1.6 mm)

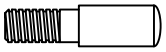

KP2745-xxx Series Tip

KP2745-035	.035"	(0.9 mm)
KP2745-040	.040"	(1.0 mm)
KP2745-045	.045"	(1.2 mm)
KP2745-364	3/64"	(1.2 mm)
KP2745-052	.052"	(1.4 mm)
KP2745-116	1/16"	(1.6 mm)
KP2745-564	5/64"	(2.0 mm)
KP2745-332	3/32"	(2.4 mm)

COPYRIGHT © 2025 CM INDUSTRIES, INC. ALL RIGHTS RESERVED

Torch Model

Tip Extender/ Adapter

Contact Tip

Gas Cups

Cobra® Gold A/W
Cobra® MX - Classic A/W
Cobra® SX AC
Prince® SG AC

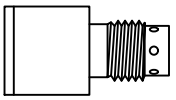

Tip Extender
621-0017

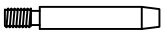

1/4" Tip
621-0003 - 621-0327
See Chart Below

Classic Cup

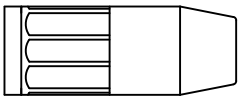

001-0137 #6 3/8" I.D.
001-0138 #8 1/2" I.D.
001-0139 #10 5/8" I.D.

Cobra® MX - Classic A/W
Cobra® Gold A/W

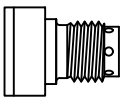

Tip Adapter
003-2210

Cobra® MX - Classic A/W
Cobra® Gold A/W

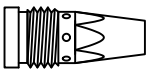

Tip Adapter
431-1630

MAX Cup

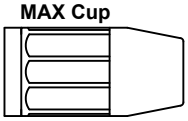

621-0420 #6 3/8" I.D.
621-0421 #8 1/2" I.D.
621-0422 #10 5/8" I.D.

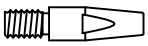

3/8" Tip
621-0390 - 621-0400
See Chart Below

Cobra® MX - MAX A/W
Cobra® MAX A/W

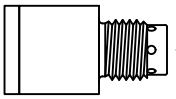

Tip Extender
621-0423

Finned Copper Cup

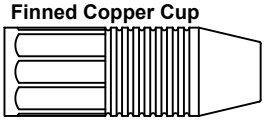

621-0248 #6 3/8" I.D.
621-0249 #8 1/2" I.D.
621-0250 #10 5/8" I.D.
621-0251 #10 5/8" I.D., HD

Python®/Prince® XL
AC & A/W

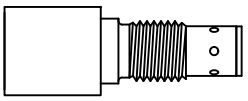

Tip Extender
621-0424

Conduit

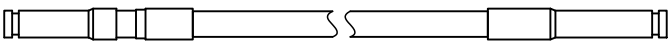

615-0601-15 15'
615-0601-25 25'
615-0007 15' King
615-0008 25' King

Teflon Liner

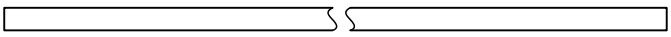

931-0137 (5 Pack)

Contact Tips

Wire Size	1/4" Std.	3/8" Std.	3/8" Long
.030" (0.8mm)	621-0325	621-0390	621-0396
.035" (0.9mm)	621-0001	621-0391	621-0397
.040" (1.0mm)	-	-	-
.045" (1.2mm)	621-0327	621-0392	621-0398
3/64" (1.2mm)	621-0003	621-0393	621-0399
.052" (1.3mm)	-	-	-
1/16" (1.6mm)	-	621-0394	621-0400
1/16" (1.6mm), Alum	-	621-0395	-

COPYRIGHT © 2025 CM INDUSTRIES, INC. ALL RIGHTS RESERVED

Nozzles

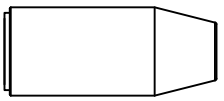

199610 1/2" I.D. Brass
199615 1/2" I.D. Copper

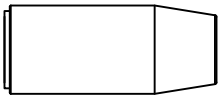

199613 5/8" I.D. Brass
198855 5/8" I.D. Copper

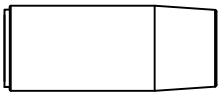

199611 3/4" I.D. Brass
199616 3/4" I.D. Copper

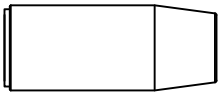

199614 5/8" I.D. Brass, H.D.
199618 5/8" I.D. Copper, H.D.

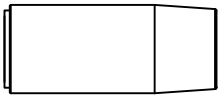

199612 3/4" I.D. Brass, H.D.
199617 3/4" I.D. Copper, H.D.

Heavy Duty Contact Tips



206xxx
See Chart Below

Standard Diffusers

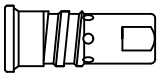

206196
Flush

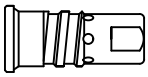

206195
1/8" Recess

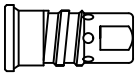

210664
1/4" Recess

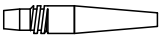

209xxx
See Chart Below

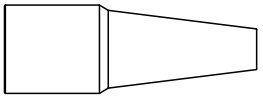

209035 3/8" I.D. Copper

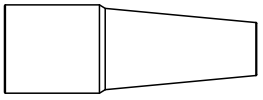

209036 1/2" I.D. Copper

Insulator

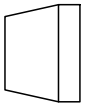

198856

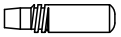

206xxx Series Sizes

206185	.030"	0.8mm
206186	.035"	0.9mm
206187	.039"	1.0mm
206188	.045"	1.2mm
206189	3/64"	1.2mm (AL)
206189	.052"	1.4mm
206190	1/16"	1.6mm
206191	.068"	1.7mm
206192	5/64"	2.0mm
206193	3/32"	2.4mm

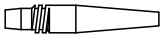

209xxx Series Sizes

209025	.030"	0.8mm
209026	.035"	0.9mm
209027	.045"	1.2mm
209028	3/64"	1.2mm
209029	.052"	1.4mm
209030	1/16"	1.6mm

COPYRIGHT © 2025 CM INDUSTRIES, INC. ALL RIGHTS RESERVED

MIG Guns
Semi-Automatic

B300

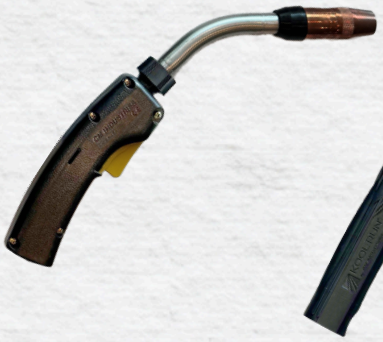

T400



M10



M25

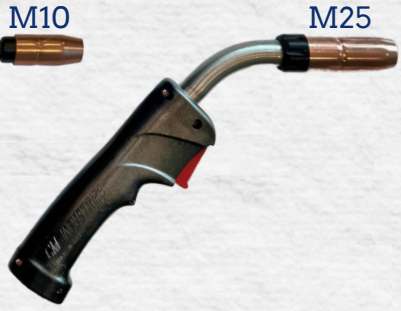

TWC 250



TWC 450SM



BNZ 501W



TRG 450W



Air Cooled MIG Guns

Bernard® BTB Guns

- B-Series™ - 200, 300, 400, & 500 Amps Available
- T-Series™ - 250, 300, 400, 500, & 600 Amps Available
- 300-G, 400-H, 600-F

Binzel®

- 14A, 15A, 24A, 25A, 26A, 36A
- 15FX, 25FX

Miller®

- H10, M10, M15, M25, M40, M100, M150

Tweco®

- 160, 180, 200, 250, 300, 400, & 500 Amps available
- H.D. - 250 & 400 Amps
- Spraymaster™ - 250, 350, 450, & 550 Amps available

Water Cooled MIG Guns

Binzel® 501W

Tregaskiss® 450W

COPYRIGHT © 2025 CM INDUSTRIES, INC. ALL RIGHTS RESERVED

Bernard - B-Series Configurator

Amperage

BQ20	200 Amps
BQ30	300 Amps
BQ40	400 Amps
BQ50	500 Amps

Gun Length

10	10 ft. (3.05m)
12	12 ft. (3.66m)
15	15 ft. (4.57m)
20	20 ft. (6.10m)
25	25 ft. (7.63m)

Handle and Trigger

200, 300 Amp	**A**	Std. Trigger, Small Handle
400 Amp	**A**	Std. Trigger, Medium Handle
500 Amp	**A**	Std. Trigger, Large Handle
200 - 400 Amp	**T**	Std. Trigger, Small Curved Handle
400, 500 Amp	**G**	Std. Trigger, Curved Handle

BQ40 15 A E 8E M C*

Neck

A	Rotatable, Short	30°	BQT2-30
B	Rotatable, Short	45°	BQT2-45
C	Rotatable, Short	60°	BQT2-60
J	Rotatable, Short	80°	BQT2-80
D	Rotatable, Medium	30°	BQT3-30
E	Rotatable, Medium	45°	BQT3-45
F	Rotatable, Medium	60°	BQT3-60
K	Rotatable, Medium	80°	BQT3-80
G	Rotatable, Long	30°	BQT5-30
H	Rotatable, Long	45°	BQT5-45
I	Rotatable, Long	60°	BQT5-60
N	Fixed, Short	30°	BQT2-30
O	Fixed, Short	45°	BQT2-45
P	Fixed, Short	60°	BQT2-60
W	Fixed, Short	80°	BQT2-80
Q	Fixed, Medium	30°	BQT3-30
R	Fixed, Medium	45°	BQT3-45
S	Fixed, Medium	60°	BQT3-60
X	Fixed, Medium	80°	BQT3-80
T	Fixed, Long	30°	BQT5-30
U	Fixed, Long	45°	BQT5-45
V	Fixed, Long	60°	BQT5-60

Contact Tip

CMI Taper-LOCK™

4B	.030"	(0.8mm)	155-1-030
4C	.035"	(0.9mm)	155-1-035
4D	.040"	(1.0mm)	155-1-040
4E	.045"	(1.2mm)	155-1-045
4R	3/64"	(1.3mm)	155-1-364
4H	.052"	(1.4mm)	155-1-052
4I	1/16"	(1.6mm)	155-1-062
4K	5/64"	(2.0mm)	155-1-564
4L	3/32"	(2.4mm)	155-1-332

Comparable to Bernard™ Centerfire™

8B	.030"	(0.8mm)	T-030
8C	.035"	(0.9mm)	T-035
8D	.039"	(1.0mm)	T-039
8E	.045"	(1.2mm)	T-045
8R	3/64"	(1.3mm)	T-047AL
8H	.052"	(1.4mm)	T-052
8I	1/16"	(1.6mm)	T-062
8K	5/64"	(2.0mm)	T-078
8L	3/32"	(2.4mm)	T-094

Compar. to Tregaskiss™ Tough Lock™

3_	0.xxx" (x.xmm)	R403-20-xx

Comparable to Bernard™ Quik Tip™

5_	0.xxx" (x.xmm)	T1xxx

Compar. to Bernard™ 7-Series Eliptical

7_	0.xxx" (x.xmm)	B74xx

Compar. to Bernard™ 1-Series Eliptical

1_	0.xxx" (x.xmm)	B15xx

Power Pin

B	Bernard™
E	Euro
L	Lincoln® LN
S	Lincoln® LF/Power Feed (Tweco® 4 w/ Lincoln Lead)
R	Lincoln® Power MIG (Tweco® 4 w/ Miller Lead)
M	Miller®
T	Tweco® 4 (Standard Lead)
W	Tweco® 5 (Standard Lead)
X	Tweco® 5 (Miller Lead)

***Universal Conventional Liner**

COPYRIGHT © 2025 CM INDUSTRIES, INC. ALL RIGHTS RESERVED

Bernard - T-Series Configurator

Amperage	
RQ30	300 Amps
RQ40	400 Amps
RQ50	500 Amps
RQ60	600 Amps

Gun Length	
10	10 ft. (3.05m)
12	12 ft. (3.66m)
15	15 ft. (4.57m)
20	20 ft. (6.10m)
25	25 ft. (7.63m)

Handle and Trigger		
300 Amp	M	Std. Trigger, T-Series Straight Handle
400 Amp	M	Std. Trigger, T-Series Straight Handle
500 Amp	M	Std. Trigger, T-Series Straight Handle
600 Amp	M	Std. Trigger, T-Series Straight Handle

RQ40 15 M S 4E M C*

Neck			
A	Rotatable, Short	30°	BQT2-30
B	Rotatable, Short	45°	BQT2-45
C	Rotatable, Short	60°	BQT2-60
J	Rotatable, Short	80°	BQT2-80
D	Rotatable, Medium	30°	BQT3-30
E	Rotatable, Medium	45°	BQT3-45
F	Rotatable, Medium	60°	BQT3-60
K	Rotatable, Medium	80°	BQT3-80
G	Rotatable, Long	30°	BQT5-30
H	Rotatable, Long	45°	BQT5-45
I	Rotatable, Long	60°	BQT5-60
O	Fixed, Short	45°	R305-45
P	Fixed, Short	60°	R305-60
R	Fixed, Medium	45°	R405-45
S	Fixed, Medium	60°	R405-60
U	Fixed, Long	45°	R505-45
V	Fixed, Long	60°	R505-60

Contact Tip CMI Taper-LOCK™			
4B	.030″	(0.8mm)	155-1-030
4C	.035″	(0.9mm)	155-1-035
4D	.040″	(1.0mm)	155-1-040
4E	.045″	(1.2mm)	155-1-045
4R	3/64″	(1.3mm)	155-1-364
4H	.052″	(1.4mm)	155-1-052
4I	1/16″	(1.6mm)	155-1-062
4K	5/64″	(2.0mm)	155-1-564
4L	3/32″	(2.4mm)	155-1-332

Contact Tip Comparable to Tregaskiss® Tough Lock™			
3B	.030″	(0.8mm)	R403-20-30
3C	.035″	(0.9mm)	R403-20-35
3D	.040″	(1.0mm)	R403-20-1.0
3E	.045″	(1.2mm)	R403-20-45
3R	3/64″	(1.3mm)	R403-20-364
3H	.052″	(1.4mm)	R403-20-52
3I	1/16″	(1.6mm)	R403-20-116
3K	5/64″	(2.0mm)	R403-20-564
3L	3/32″	(2.4mm)	R403-20-332

Contact Tip Comparable to Bernard® Centerfire™			
8B	.030″	(0.8mm)	T-030
8C	.035″	(0.9mm)	T-035
8D	.039″	(1.0mm)	T-039
8E	.045″	(1.2mm)	T-045
8R	3/64″	(1.3mm)	T-047AL
8H	.052″	(1.4mm)	T-052
8I	1/16″	(1.6mm)	T-062
8K	5/64″	(2.0mm)	T-078
8L	3/32″	(2.4mm)	T-094

Power Pin	
B	Bernard®
E	Euro
L	Lincoln® LN
S	Lincoln® LF/Power Feed (Tweco® 4 w/ Lincoln Lead)
R	Lincoln® Power MIG (Tweco® 4 w/ Miller Lead)
M	Miller®
T	Tweco® 4 (Standard Lead)
W	Tweco® 5 (Standard Lead)
X	Tweco® 5 (Miller Lead)

***Universal Conventional Liner**

COPYRIGHT © 2025 CM INDUSTRIES, INC. ALL RIGHTS RESERVED

Factory Installed Consumables
for B & T Series Gun

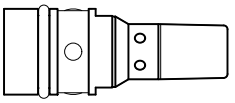

"4" CM Taper-LOCK™ Consumables

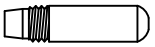

See pages 6-7 for full consumables selection.

	200A	300A	400A	500A
Contact Tip	155-1-xxx	155-1-xxx	155-1-xxx	155-1-xxx
Diffuser	154-R505	154-R505	154-R505	154-R505
Nozzle	152-10-50C	152-10-62C	152-30-62C	152-30-62C
Insulator **w/ Q Neck** **w/ T Neck**	 B10012 R402-7	 B10012 R402-11	 B10012 R402-11	 B10012 R402-11
Liner "C"	L3A-15 .035"-.045" L4A-15 .052"-.062"	L3A-15 .035"-.045" L4A-15 .052"-.062"	L3A-15 .035" L4A-15 .045"-.062"	L4A-15 .045"-.062" L6A-15 5/64" L7A-15 3/32"

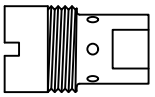

"8" Std. Centerfire™ Consumables

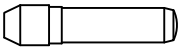

See page 8 for full consumables selection.

	200A	300A	400A	500A
Contact Tip	T-xxx	T-xxx	T-xxx	T-xxx
Diffuser	DS-1	DS-1	D-1	D-1
Nozzle	NS-1218C	NS-5818C	N-5818C	N-5814C
Insulator	B4323R	B4323R	B4423R	B4423R
Liner "C"	L3A-15 .035"-.045" L4A-15 .052"-.062"	L3A-15 .035"-.045" L4A-15 .052"-.062"	L3A-15 .035" L4A-15 .045"-.062"	L4A-15 .045"-.062" L6A-15 5/64" L7A-15 3/32"

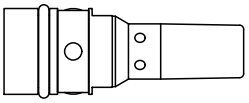

"3" Std. Tough Lock™ Consumables

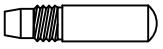

See pages 9-11 for full consumables selection.

	200A	300A	400A	500A
Contact Tip	R403-20-xx	R403-20-xx	R403-20-xx	R403-20-xx
Diffuser	R404-26	R404-26	R404-26	R404-26
Nozzle	R401-4-50	R401-4-62	R401-6-62	R401-6-62
Insulator **w/ Q Neck** **w/ T Neck**	 B10012 R402-7	 B10012 R402-11	 B10012 R402-11	 B10012 R402-11
Liner "C"	L3A-15 .035"-.045" L4A-15 .052"-.062"	L3A-15 .035"-.045" L4A-15 .052"-.062"	L3A-15 .035" L4A-15 .045"-.062"	L4A-15 .045"-.062" L6A-15 5/64" L7A-15 3/32"
Std. Liner	R415-35-15 .035"-.045" R415-116-15 .052"-.062"	R415-35-15 .035"-.045" R415-116-15 .052"-.062"	R415-35-15 .035" R415-116-15 .045"-.062" R415-564-15 5/64"	R415-116-15 .045"-.062" R415-564-15 5/64" R415-332-15 3/32"

COPYRIGHT © 2025 CM INDUSTRIES, INC. ALL RIGHTS RESERVED

Factory Installed Consumables
for B & T Series Gun

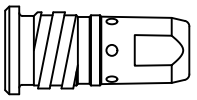

"5" Std. QuikTip™ Consumables



See page 12 for full consumables selection.

	200A	300A	400A	500A
Contact Tip	T-1xxx	T-1xxx	T-1xxx	T-1xxx
Diffuser	D118Q	D118Q	D118Q	D114Q
Nozzle	N1C58Q	N1C58Q	N1C58Q	N1C34HQ
Insulator	B4423R	B4423R	B4423R	B4423R
Liner "C"	L3A-15 .035"-.045" L4A-15 .052"-.062"	L3A-15 .035"-.045" L4A-15 .052"-.062"	L3A-15 .035"-.045" L4A-15 .052"-.062"	L4A-15 .045"-.062" L6A-15 5/64" L7A-15 3/32"

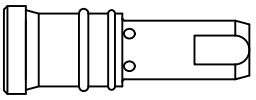

"7" Short Elliptical Tip™ Consumables

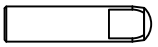

See page 13 for full consumables selection.

	200A	300A	400A	500A
Contact Tip	B74xx	B74xx	B74xx	B74xx
Diffuser	B4335	B4335	B4435	B4435
Nozzle	B4392	B4391	B4491	B4591
Insulator	B4323R	B4323R	B4423R	B4423R
Liner "C"	L3A-15 .035"-.045" L4A-15 .052"-.062"	L3A-15 .035"-.045" L4A-15 .052"-.062"	L3A-15 .035" L4A-15 .045"-.062"	L4A-15 .045"-.062" L6A-15 5/64" L7A-15 3/32"

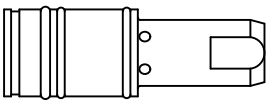

"1" Long Elliptical Tip™ Consumables

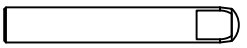

See page 13 for full consumables selection.

	200A	300A	400A	500A
Contact Tip	B15xx	B15xx	B15xx	B15xx
Diffuser	B4235	B4235	B4635	B4635
Nozzle	B4392	B4391	B4491	B4591
Insulator	B4323R	B4323R	B4423R	B4423R
Liner "C"	L3A-15 .035"-.045" L4A-15 .052"-.062"	L3A-15 .035"-.045" L4A-15 .052"-.062"	L3A-15 .035 L4A-15 .045"-.062"	L4A-15 .045"-.062" L6A-15 5/64" L7A-15 3/32"

COPYRIGHT © 2025 CM INDUSTRIES, INC. ALL RIGHTS RESERVED

B200

AIR-COOLED MIG GUN

Replacement Suitable for Bernard® BTB

** For Gun Part Numbers See Configurator on Page 18 **

RATING	Factory Installed Consumables			
	Style	Contact Tip	Diffuser	Nozzle
200 Amp CO2 @ 100% Duty Cycle 200 Amp Mixed Gas @ 60% Duty Cycle Wire Capacity: 0.023" (0.6mm) - 0.045" (1.2mm)	CM Taper-Lock™	155-1-xx	154-R505	152-10-50C
	Centerfire™	T-xxx	DS-1	NS-1218C
	Elliptical (Short)	B74xx	B4335	B4392
	Elliptical (Long)	B15xx	B4235	B4392
	Quik Tip™	T1xxx	D118Q	N1C12Q
	Tough Lock™	R403-20-xx	R404-26	R401-4-50

#	Consumable Options	
1-3.	**CM Taper-LOCK™**	See Pages 6-7
1-3.	**Centerfire™**	See Page 8
1-3.	**Tough Lock™**	See Pages 9-11
1-3.	**Quik Tip™**	See Page 12
1-3.	**Elliptical**	See Page 13

#	Part Number	Description
4.	B4323R	Silicone Cap
	B10012	Silicone Cap for CM Taper-LOCK & Tough Lock Consumables
5.	BQT2-30	Q Neck Assy., 30°, Short
	BQT2-45	Q Neck Assy., 45°, Short, **Most Common**
	BQT2-60	Q Neck Assy., 60°, Short
	BQT2-80	Q Neck Assy., 80°, Short
	BQT3-30	Q Neck Assy., 30°, Medium
	BQT3-45	Q Neck Assy., 45°, Medium
	BQT3-60	Q Neck Assy., 60°, Medium
	BQT3-80	Q Neck Assy., 80°, Medium
5a.	B1840057	Plastic Lock Nut
5b.	B1840031	Silicone Rubber Seal
6.	B4780	Insulator Hex Nut, Optional
7.	B4238	Hook, Optional
8.	B4207	Post Fastener
9.	B4209	Handle Screw
	B1880004	Screw/Post Kit (5 each)
10.	B1880155	Handle Kit w/ Posts & Screws
11.	B5662	Trigger Assembly
12.	B4213B	End Fitting
13.	B4305	Cone Nut
14.	B2520074	Handle Spring
15.	B4991	Clamp, Conduit
16.	B2660001	Trigger Terminal
17.	B7669	Clamp, Jacket

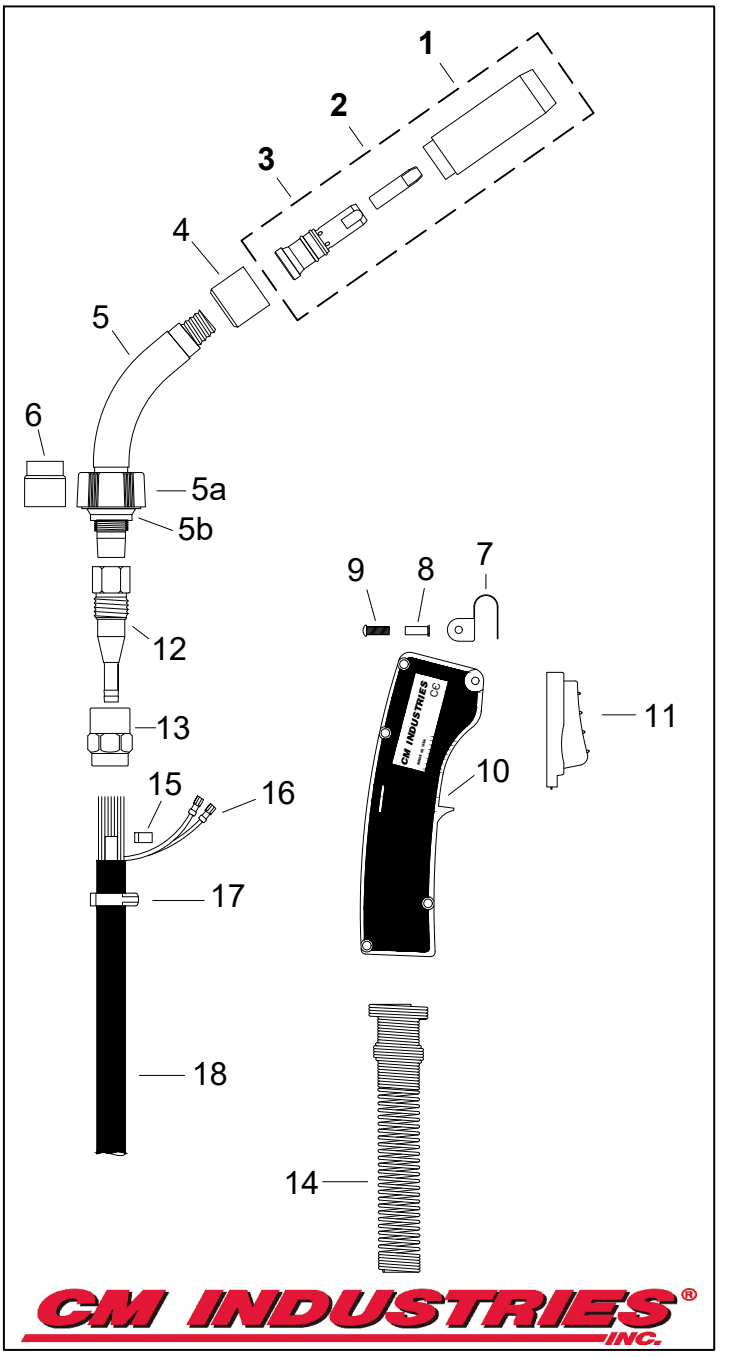

CM INDUSTRIES® INC.

COPYRIGHT © 2025 CM INDUSTRIES, INC. ALL RIGHTS RESERVED

#	Part Number	Description
18.	B1060121	200A Cable Assembly, 10'
	B1060122	200A Cable Assembly, 12'
	B1060123	200A Cable Assembly, 15'
	B1060124	200A Cable Assembly, 20'
	B1060125	200A Cable Assembly, 25'
19.	B2520041-S	Strain Relief Spring
20.	B2520066	Strain Relief Kit
21.	B2280056	Support Screw
22.	300-05-001	Electrical Plug, Miller
23.	300-05-002	Electrical Plug, Lincoln LF, LN, Power Feed
24.	B1010027R	Adaptor Block
25.	R214-1	Power Pin w/ O-Rings, Miller
26.	R214-116	Power Pin Cap, Miller .035" - 1/16"
27.	R414-11-2	O-Ring, Miller
28.	R214	Power Pin w/ O-Rings, Tweco #4
29.	C224	O-Ring, Tweco #4
30.	C44C	Set Screw
31.	R214-2	Power Pin, Lincoln LN
32.	B8631	Gas Hose Nipple
33.	401-00-001	Euro Connector Nut
34.	B5060T	Euro Connector Plug
35.	285-00-002	O-Ring, Euro
36.	B1880074	Rigid Strain Relief Kit
37.	B4925	Locking Sleeve
38.	B4901	Quick Connect Body
39.	B4924	Lead Wire
40.	B4919	Gas Pin Assembly
41.	B4916	Wave Spring
42.	B4912	Snap Ring, Small
43.	B4911	Snap Ring, Large
44.	B2200140	Power Pin, Bernard EZ
	B1880259B	Bernard Quick Disconnect Kit (Items 37-44)
45.	L1A-15	Liner Assembly, 15', .023"- .030"
	L2A-15	Liner Assembly, 15', .030"- .035"
	L3A-15	Liner Assembly, 15', .035"- .045"
	L4A-15	Liner Assembly, 15', .045"- 1/16"
	L1A-25	Liner Assembly, 25', .023"- .030"
	L2A-25	Liner Assembly, 25', .030"- .035"
	L3A-25	Liner Assembly, 25', .035"- .045"
	L4A-25	Liner Assembly, 25', .045"- 1/16"

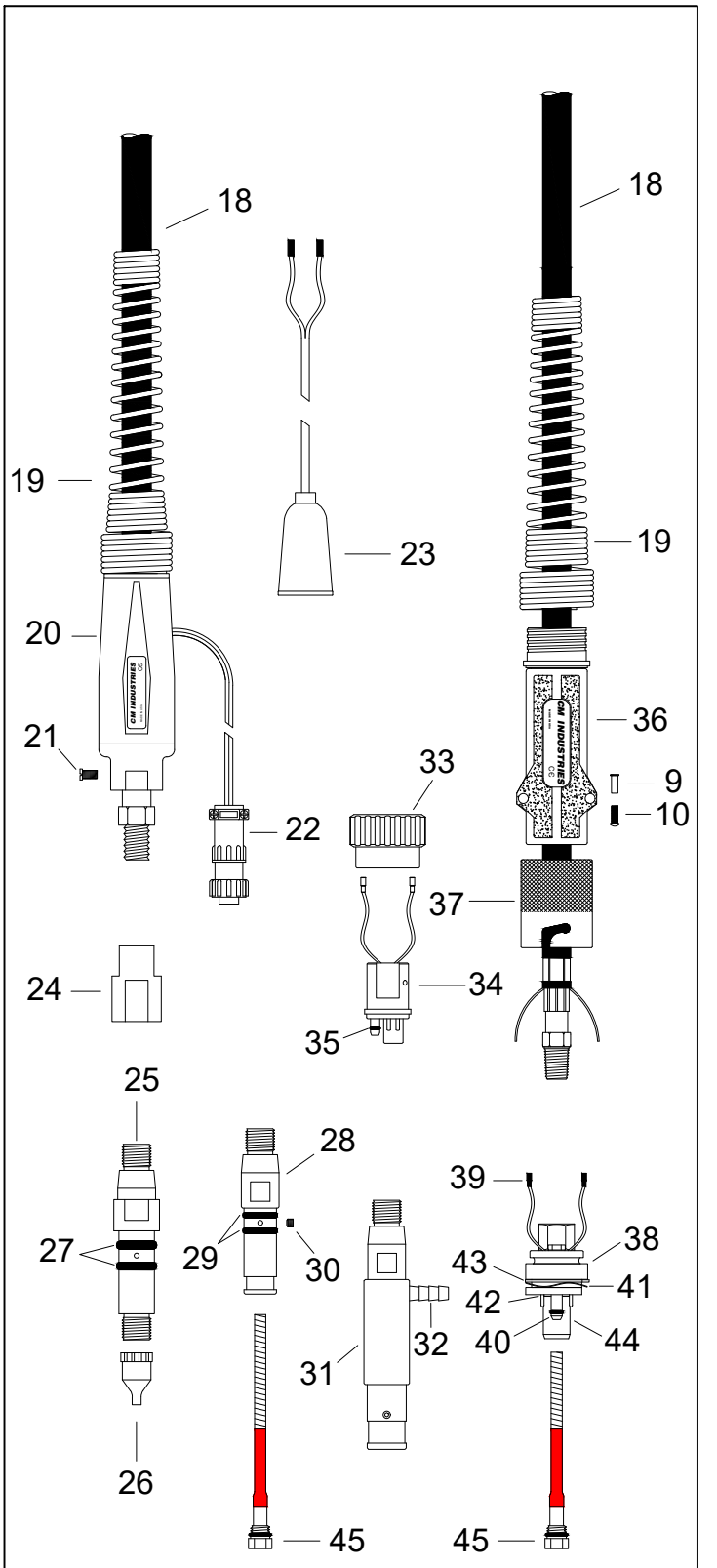

CM INDUSTRIES® INC.

COPYRIGHT © 2025 CM INDUSTRIES, INC. ALL RIGHTS RESERVED

B300

AIR-COOLED MIG GUN

Replacement Suitable for Bernard® BTB

** For Gun Part Numbers See Configurator on Page 18 **

RATING	Factory Installed Consumables			
	Style	**Contact Tip**	**Diffuser**	**Nozzle**
300 Amp CO2 @ 100% Duty Cycle **300 Amp Mixed Gas @ 60% Duty Cycle** **Wire Capacity: 0.023" (0.6mm) - 1/16" (1.6mm)**	**CM Taper-Lock™**	155-1-xx	154-R505	152-10-62C
	Centerfire™	T-xxx	DS-1	NS-5818C
	Elliptical (Short)	B74xx	B4335	B4391
	Elliptical (Long)	B15xx	B4235	B4391
	Quik Tip™	T1xxx	D118Q	N1C58Q
	Tough Lock™	R403-20-xx	R404-26	R401-4-62

#	Consumable Options	
1-3.	**CM Taper-LOCK™**	See Pages 6-7
1-3.	**Centerfire™**	See Page 8
1-3.	**Tough Lock™**	See Pages 9-11
1-3.	**Quik Tip™**	See Page 12
1-3.	**Elliptical**	See Page 13

#	Part Number	Description
4.	B4323R	Silicone Cap
	B10012	Silicone Cap for CM Taper-LOCK & Tough Lock Consumables
5.	BQT2-30	Q Neck Assy., 30°, Short
	BQT2-45	Q Neck Assy., 45°, Short
	BQT2-60	Q Neck Assy., 60°, Short
	BQT2-80	Q Neck Assy., 80°, Short
	BQT3-30	Q Neck Assy., 30°, Medium
	BQT3-45	Q Neck Assy., 45°, Medium, **Most Common**
	BQT3-60	Q Neck Assy., 60°, Medium
	BQT3-80	Q Neck Assy., 80°, Medium
	BQT5-30	Q Neck Assy., 30°, Long
	BQT5-45	Q Neck Assy., 45°, Long
	BQT5-60	Q Neck Assy., 60°, Long
	BQT5-80	Q Neck Assy., 80°, Long
5a.	B1840057	Plastic Lock Nut
5b.	B1840031	Silicone Rubber Seal
6.	B4780	Insulator Hex Nut, Optional
7.	B4238	Hook, Optional
8.	B4207	Post Fastener
9.	B4209	Handle Screw
	B1880004	Screw/Post Kit (5 each)
10.	B1880155	Handle Kit w/ Posts & Screws
11.	B5662	Trigger Assembly
12.	B4313B	End Fitting
13.	B4305	Cone Nut
14.	B2520074	Handle Spring
15.	B4991	Clamp, Conduit
16.	B2660001	Trigger Terminal
17.	B4823	Clamp, Jacket

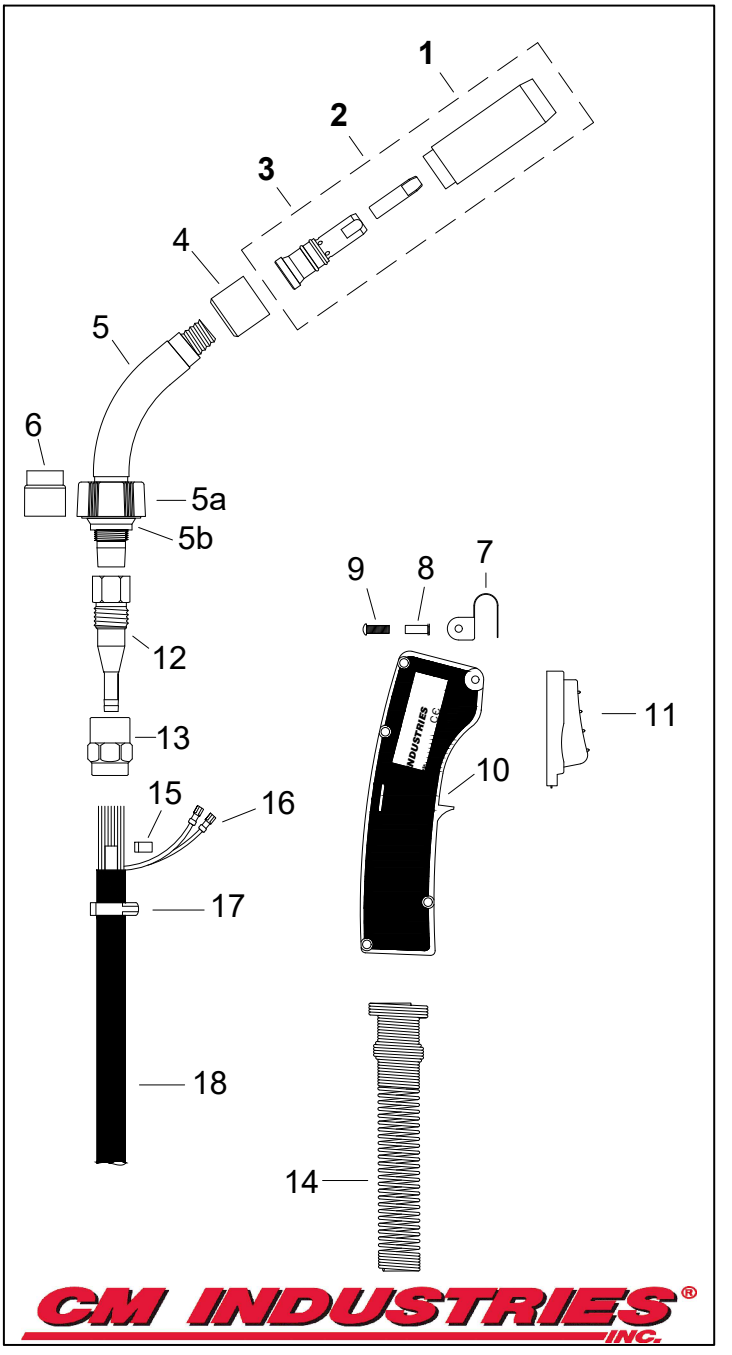

CM INDUSTRIES® INC.

COPYRIGHT © 2025 CM INDUSTRIES, INC. ALL RIGHTS RESERVED

#	Part Number	Description
18.	B1060109	300A Cable Assembly, 10'
	B1060110	300A Cable Assembly, 12'
	B1060111	300A Cable Assembly, 15'
	B1060112	300A Cable Assembly, 20'
	B1060113	300A Cable Assembly, 25'
19.	B2520041-S	Strain Relief Spring
20.	B2520066	Strain Relief Kit
21.	B2280056	Support Screw
22.	300-05-001	Electrical Plug, Miller
23.	300-05-002	Electrical Plug, Lincoln LF, LN, Power Feed
24.	B1010027R	Adaptor Block
25.	R214-1	Power Pin w/ O-Rings, Miller
26.	R214-116	Power Pin Cap, Miller .035" - 1/16"
27.	R414-11-2	O-Ring, Miller
28.	R214	Power Pin w/ O-Rings, Tweco #4
29.	C224	O-Ring, Tweco #4
30.	C44C	Set Screw
31.	R214-2	Power Pin, Lincoln LN
32.	B8631	Gas Hose Nipple
33.	401-00-001	Euro Connector Nut
34.	B5060T	Euro Connector Plug
35.	285-00-002	O-Ring, Euro
36.	B1880074	Rigid Strain Relief Kit
37.	B4925	Locking Sleeve
38.	B4901	Quick Connect Body
39.	B4924	Lead Wire
40.	B4919	Gas Pin Assembly
41.	B4916	Wave Spring
42.	B4912	Snap Ring, Small
43.	B4911	Snap Ring, Large
44.	B2200140	Power Pin, Bernard EZ
	B1880259B	Bernard Quick Disconnect Kit (Items 37-44)
45.	L1A-15	Liner Assembly, 15', .023"- .030"
	L2A-15	Liner Assembly, 15', .030"- .035"
	L3A-15	Liner Assembly, 15', .035"- .045"
	L4A-15	Liner Assembly, 15', .045"- 1/16"
	L1A-25	Liner Assembly, 25', .023"- .030"
	L2A-25	Liner Assembly, 25', .030"- .035"
	L3A-25	Liner Assembly, 25', .035"- .045"
	L4A-25	Liner Assembly, 25', .045"- 1/16"

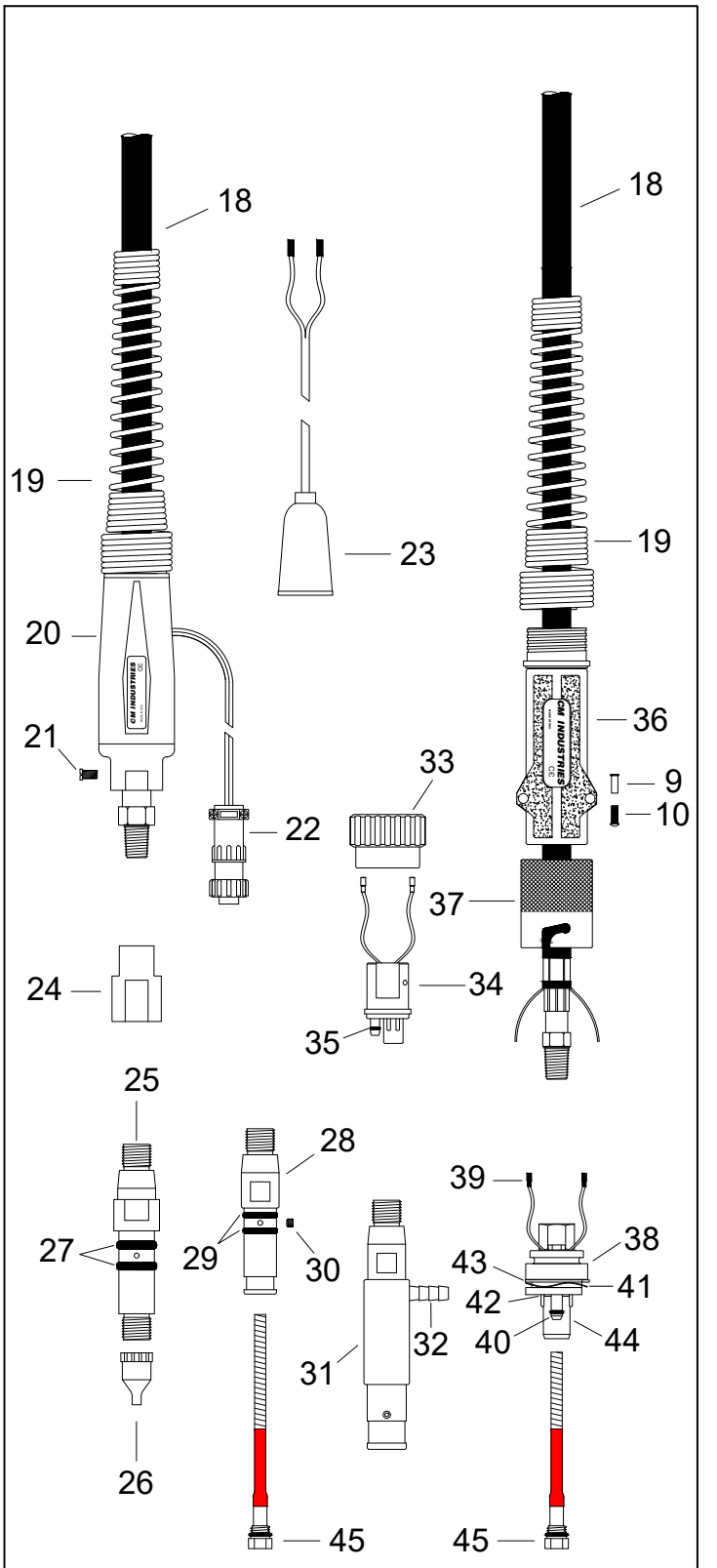

COPYRIGHT © 2025 CM INDUSTRIES, INC. ALL RIGHTS RESERVED

B400

AIR-COOLED MIG GUN

Replacement Suitable for Bernard® BTB

** For Gun Part Numbers See Configurator on Page 18 **

RATING	Factory Installed Consumables			
	Style	**Contact Tip**	**Diffuser**	**Nozzle**
400 Amp CO2 @ 100% Duty Cycle **400 Amp Mixed Gas @ 60% Duty Cycle** **Wire Capacity: 0.035" (0.9mm) - 5/64" (2.0mm)**	**CM Taper-Lock™**	155-1-xx	154-R505	152-30-62C
	Centerfire™	T-xxx	D-1	N-5818C
	Elliptical (Short)	B74xx	B4435	B4491
	Elliptical (Long)	B15xx	B4635	B4491
	Quik Tip™	T1xxx	D118Q	N1C58Q
	Tough Lock™	R403-20-xx	R404-26	R401-6-62

#	Consumable Options	
1-3.	**CM Taper-LOCK™**	See Pages 6-7
1-3.	**Centerfire™**	See Page 8
1-3.	**Tough Lock™**	See Pages 9-11
1-3.	**Quik Tip™**	See Page 12
1-3.	**Elliptical**	See Page 13

#	Part Number	Description
4.	B4423R	Silicone Cap
	B10012	Silicone Cap for CM Taper-LOCK & Tough Lock Consumables
5.	BQT2-30	Q Neck Assy., 30°, Short
	BQT2-45	Q Neck Assy., 45°, Short
	BQT2-60	Q Neck Assy., 60°, Short
	BQT2-80	Q Neck Assy., 80°, Short
	BQT3-30	Q Neck Assy., 30°, Medium
	BQT3-45	Q Neck Assy., 45°, Medium, **Most Common**
	BQT3-60	Q Neck Assy., 60°, Medium
	BQT3-80	Q Neck Assy., 80°, Medium
	BQT5-30	Q Neck Assy., 30°, Long
	BQT5-45	Q Neck Assy., 45°, Long
	BQT5-60	Q Neck Assy., 60°, Long
	BQT5-80	Q Neck Assy., 80°, Long
5a.	B1840057	Plastic Lock Nut
5b.	B1840031	Silicone Rubber Seal
6.	B4780	Insulator Hex Nut, Optional
7.	B4238	Hook, Optional
8.	B4207	Post Fastener
9.	B4209	Handle Screw
	B1880004	Screw/Post Kit (5 each)
10.	B1880198	Handle Kit w/ Posts & Screws
11.	B5662	Trigger Assembly
12.	B1680086	End Fitting
13.	B1540003	Cone Nut
14.	B2520042	Handle Spring
15.	B4992	Clamp, Conduit
16.	B2660001	Trigger Terminal
17.	B683	Clamp, Jacket

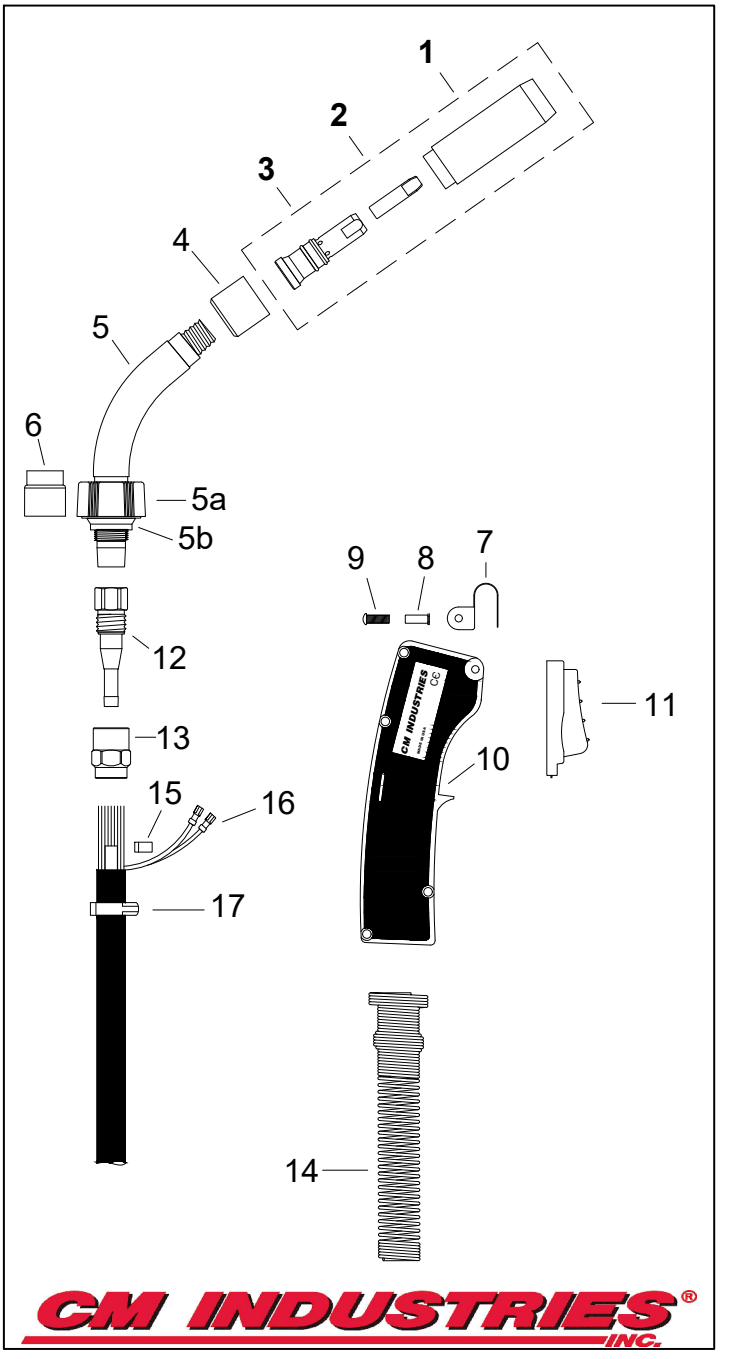

CM INDUSTRIES® INC.

COPYRIGHT © 2025 CM INDUSTRIES, INC. ALL RIGHTS RESERVED

#	Part Number	Description
18.	B2520041-S	Strain Relief Spring
19.	B2520066	Strain Relief Kit
20.	B2280056	Support Screw
21.	B1680088	End Fitting, Rear, w/ Male Thread
22.	300-05-001	Electrical Plug, Miller
23.	300-05-002	Electrical Plug, Lincoln LF, LN, Power Feed
24.	R414-400CM	Adaptor Block
25.	R214-1	Power Pin w/ O-Rings, Miller
26.	R214-116	Power Pin Cap, Miller .035" - 1/16"
	R214-332	Power Pin Cap, Miller 5/64" - 3/32"
27.	R414-11-2	O-Ring, Miller
28.	R214	Power Pin w/ O-Rings, Tweco #4
29.	C224	O-Ring, Tweco #4
30.	C44C	Set Screw
31.	R214-2	Power Pin, Lincoln LN
32.	B8631	Gas Hose Nipple
33.	401-00-001	Euro Connector Nut
34.	B5060T	Euro Connector Plug
35.	285-00-002	O-Ring, Euro
36.	B1880074	Rigid Strain Relief Kit
37.	B4925	Locking Sleeve
38.	B4901	Quick Connect Body
39.	B4924	Lead Wire
40.	B4919	Gas Pin Assembly
41.	B4916	Wave Spring
42.	B4912	Snap Ring, Small
43.	B4911	Snap Ring, Large
44.	B2200140	Power Pin, Bernard EZ
	B1880259B	Bernard Quick Disconnect Kit (Items 37-44)
45.	L2A-15	Liner Assembly, 15', .030" - .035"
	L3A-15	Liner Assembly, 15', .035" - .045"
	L4A-15	Liner Assembly, 15', .045" - 1/16"
	L6A-15	Liner Assembly, 15', 5/64" - 3/32"
	L2A-25	Liner Assembly, 25', .030" - .035"
	L3A-25	Liner Assembly, 25', .035" - .045"
	L4A-25	Liner Assembly, 25', .045" - 1/16"
	L6A-25	Liner Assembly, 25', 5/64" - 3/32"

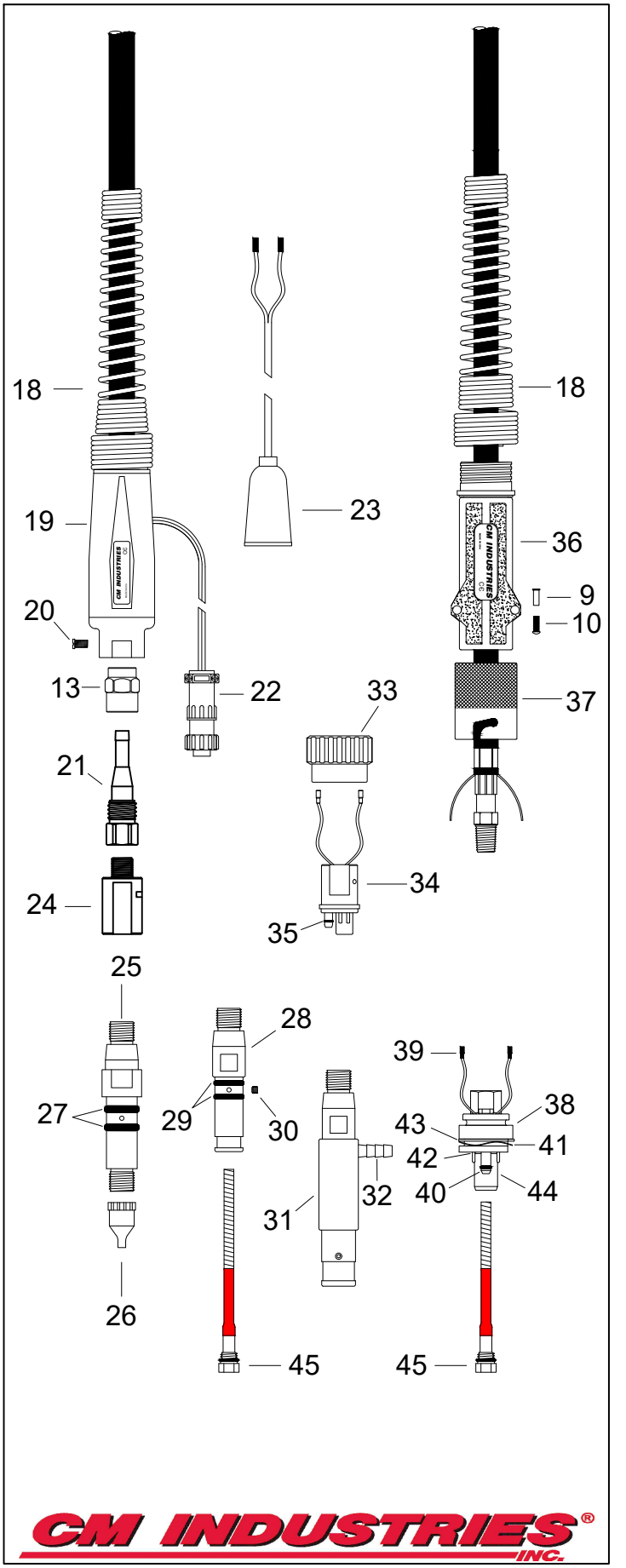

COPYRIGHT © 2025 CM INDUSTRIES, INC. ALL RIGHTS RESERVED

B500 AIR-COOLED MIG GUN

Replacement Suitable for Bernard® BTB

**** For Gun Part Numbers See Configurator on Page 18 ****

RATING	Factory Installed Consumables			
	Style	Contact Tip	Diffuser	Nozzle
500 Amp CO2 @ 100% Duty Cycle 500 Amp Mixed Gas @ 60% Duty Cycle Wire Capacity: 0.035" (0.9mm) - 7/64" (2.8mm)	CM Taper-Lock™	155-1-xx	154-R505	152-30-62C
	Centerfire™	T-xxx	D-1	N-5814C
	Elliptical (Short)	B74xx	B4435	B4591
	Elliptical (Long)	B15xx	B4635	B4591
	Quik Tip™	T1xxx	D114Q	N1C34HQ
	Tough Lock™	R403-20-xx	R404-26	R401-6-62

#	Consumable Options	
1-3.	**CM Taper-LOCK™**	See Pages 6-7
1-3.	**Centerfire™**	See Page 8
1-3.	**Tough Lock™**	See Pages 9-11
1-3.	**Quik Tip™**	See Page 12
1-3.	**Elliptical**	See Page 13

#	Part Number	Description
4.	B4423R	Silicone Cap
	B10012	Silicone Cap for CM Taper-LOCK & Tough Lock Consumables
5.	BQT2-30	Q Neck Assy., 30°, Short
	BQT2-45	Q Neck Assy., 45°, Short
	BQT2-60	Q Neck Assy., 60°, Short
	BQT2-80	Q Neck Assy., 80°, Short
	BQT3-30	Q Neck Assy., 30°, Medium
	BQT3-45	Q Neck Assy., 45°, Medium, **Common**
	BQT3-60	Q Neck Assy., 60°, Medium
	BQT3-80	Q Neck Assy., 80°, Medium
	BQT5-30	Q Neck Assy., 30°, Long
	BQT5-45	Q Neck Assy., 45°, Long, **Common**
	BQT5-60	Q Neck Assy., 60°, Long
	BQT5-80	Q Neck Assy., 80°, Long
5a.	B1840057	Repl. Plastic Lock Nut
5b.	B1840031	Repl. Silicone Rubber Seal
6.	B4780	Insulator Hex Nut, Optional
7.	B4438	Hook, Optional
8.	B4407	Post Fastener
9.	B4409	Handle Screw
10.	B4408	Handle Kit w/ Posts & Screws
11.	B4422	Trigger Assembly
12.	B4513B	End Fitting
13.	B4416	Cone Nut
14.	185-40-001	Handle Spring
15.	B4993	Clamp, Conduit
16.	B457	Trigger Terminal
17.	B4944	Clamp, Jacket

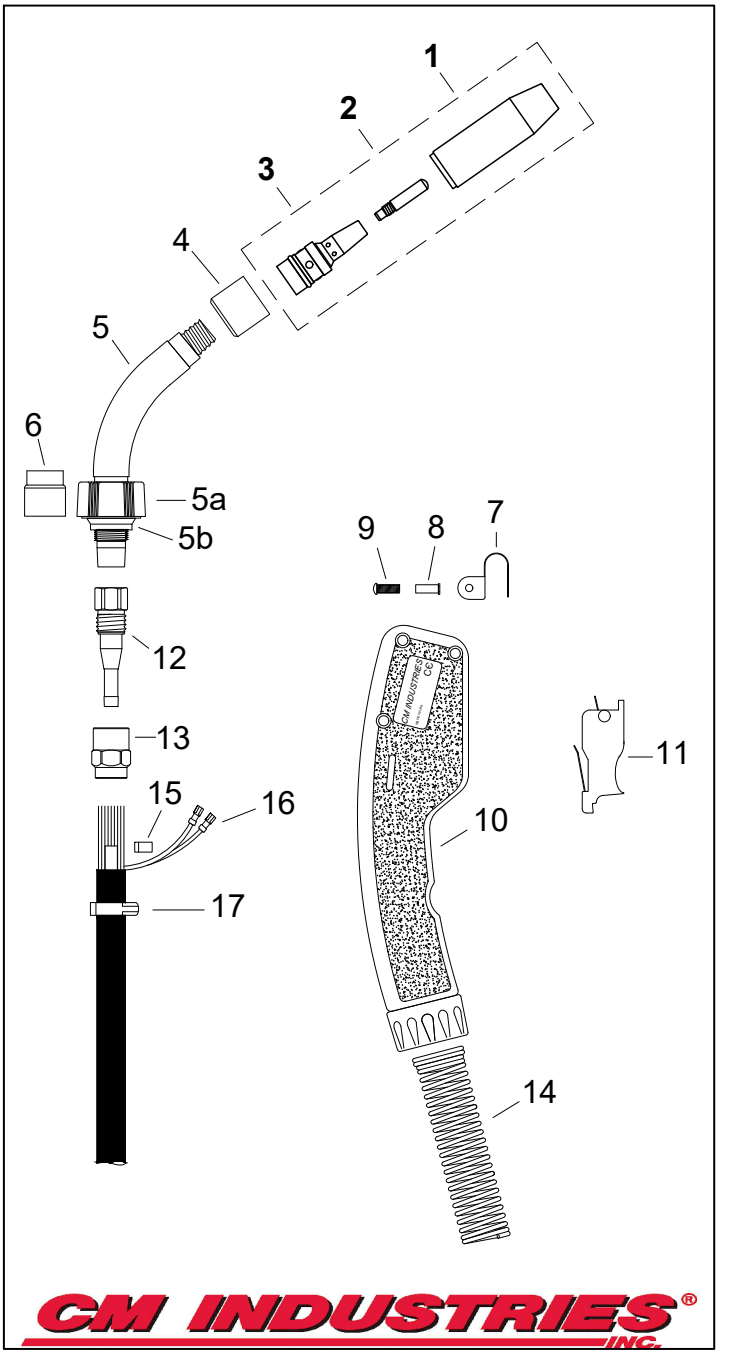

CM INDUSTRIES® INC.

COPYRIGHT © 2025 CM INDUSTRIES, INC. ALL RIGHTS RESERVED

#	Part Number	Description
18.	B2520041	Strain Relief Spring
19.	B2520066	Strain Relief Kit
20.	B2280056	Support Screw
21.	B4513M	End Fitting, Rear, w/ Male Thread
22.	300-05-001	Electrical Plug, Miller
23.	300-05-002	Electrical Plug, Lincoln LF, LN, Power Feed
24.	B1010027R	Adaptor Block
25.	R214-1	Power Pin w/ O-Rings, Miller
26.	R214-116	Power Pin Cap, Miller .035" - 1/16"
	R214-332	Power Pin Cap, Miller 5/64" - 3/32"
27.	R414-11-2	O-Ring, Miller
28.	R214	Power Pin w/ O-Rings, Tweco #4
29.	C224	O-Ring, Tweco #4
30.	C44C	Set Screw
31.	R214-2	Power Pin, Lincoln LN
32.	B8631	Repl. Gas Hose Nipple
33.	401-00-001	Euro Connector Nut
34.	B5060T	Euro Connector Plug
35.	285-00-002	O-Ring, Euro
36.	B1880074	Rigid Strain Relief Kit
37.	B4925	Locking Sleeve
38.	B4901	Quick Connect Body
39.	B4924	Lead Wire
40.	B4919	Gas Pin Assembly
41.	B4916	Wave Spring
42.	B4912	Snap Ring, Small
43.	B4911	Snap Ring, Large
44.	B2200140	Power Pin, Bernard EZ
	B1880259B	Bernard Quick Disconnect Kit (Items 37-44)
45.	L3A-15	Liner Assembly, 15', .035" - .045"
	L4A-15	Liner Assembly, 15', .045" - 1/16"
	L6A-15	Liner Assembly, 15', 5/64" - 3/32"
	L7A-15	Liner Assembly, 15', 3/32" - 7/64"
	L8A-15	Liner Assembly, 15', 7/64" - 1/8"
	L3A-25	Liner Assembly, 25', .035" - .045"
	L4A-25	Liner Assembly, 25', .045" - 1/16"
	L6A-25	Liner Assembly, 25', 5/64" - 3/32"
	L7A-25	Liner Assembly, 25', 3/32" - 7/64"
	L8A-25	Liner Assembly, 25', 7/64" - 1/8"

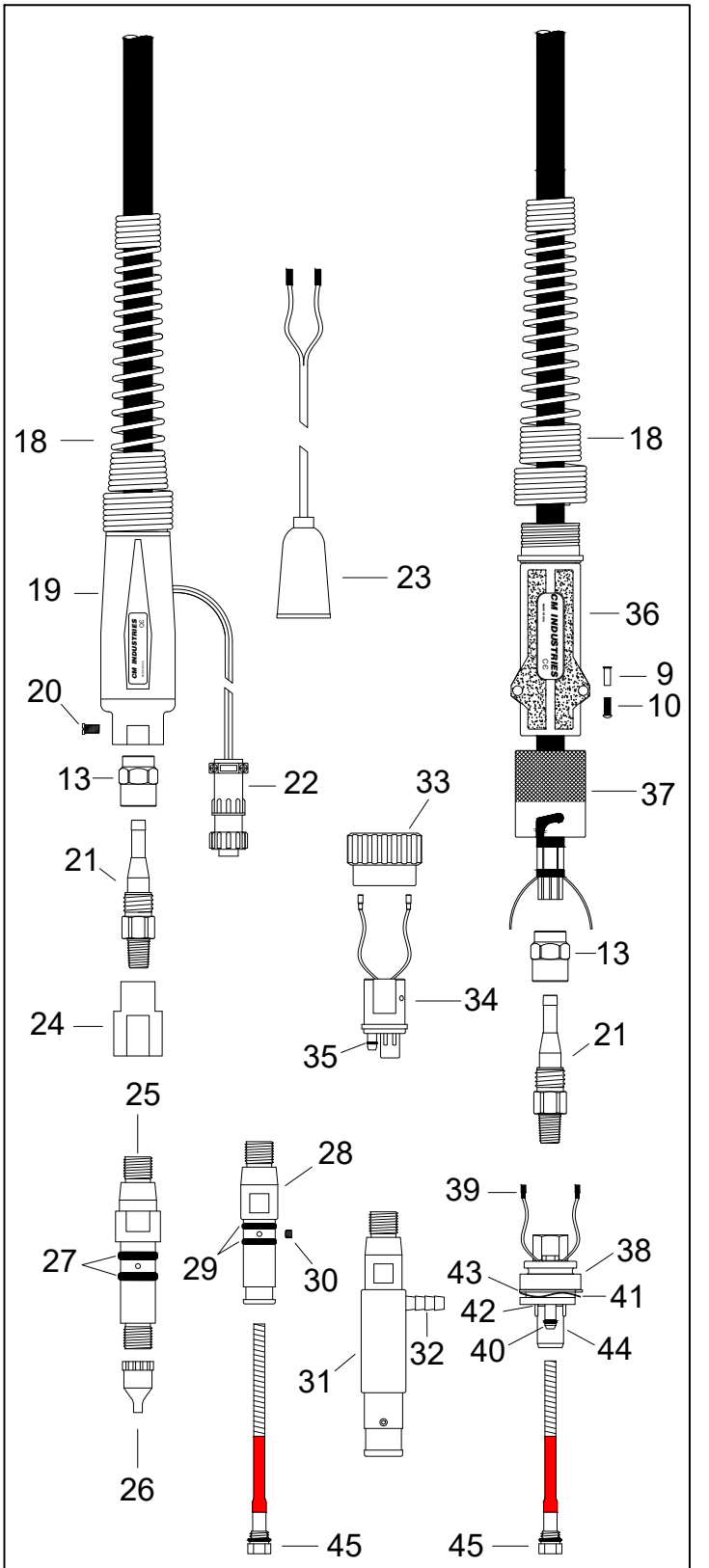

COPYRIGHT © 2025 CM INDUSTRIES, INC. ALL RIGHTS RESERVED

BND 300-G

AIR-COOLED MIG GUN

Replacement Suitable for Bernard®

RATING	GUN ORDERING PART NUMBER		GUN PLUG Direct Connect
	w/ 50° Body Tube	w/ 80° Body Tube	
300 Amp CO2 @ 100% Duty Cycle **250 Amp Mixed Gas @ 100% Duty Cycle** **Wire Capacity: 0.030" (0.8mm) - 0.052" (1.4mm)**	B52xxA	B52xxA-80	**Bernard®**
	B52xxAE	B52xxAE-80	**Euro**
	B52xxAL	B52xxAL-80	**Lincoln® LN**
	B52xxALF	B52xxALF-80	**Lincoln® LF & Power Feed**
	B52xxAM	B52xxAM-80	**Miller®**
	B52xxAT	B52xxAT-80	**Tweco®**
	xx = Standard lengths of 10, 12, 15, 20 and 25 ft. Custom lengths also available.		

#	Part Number	Description
1.	B4391	Nozzle - Brass 5/8" I.D., **Std.**
	B4393	Nozzle - Copper 5/8" I.D.
2.	B4392	Nozzle - Brass 1/2" I.D.
	B4394	Nozzle - Copper 1/2" I.D.
3.	B4295	Nozzle - Brass Tapered, Long 11/32" I.D.
4.	B7497	Contact Tip, .023" 0.6mm
	B7488	Contact Tip, .030" 0.8mm
	B7489	Contact Tip, .035" 0.9mm, **Std.**
	B7496	Contact Tip, .040" 1.0mm
	B7490	Contact Tip, .045" 1.2mm
	B7498	Contact Tip, .052" 1.4mm
5.	B4285	Contact Tip, Tapered, .030" 0.8mm
	B4281	Contact Tip, Tapered, .035" 0.9mm
	B4299	Contact Tip, Tapered, .040" 1.0mm
	B4282	Contact Tip, Tapered, .045" 1.2mm
	B4283	Contact Tip, Tapered, .052" 1.4mm
5a.	GT030H	Contact Tip, H.D. Threaded, .030" 0.8mm
	GT035H	Contact Tip, H.D. Threaded, .035" 0.9mm
	GT040H	Contact Tip, H.D. Threaded, .040" 1.0mm
	GT045H	Contact Tip, H.D. Threaded, .045" 1.2mm
	GT364H	Contact Tip, H.D. Threaded, 3/64" 1.3mm
	GT052H	Contact Tip, H.D. Threaded, .052" 1.4mm
5b.	GD518	Diffuser, 1/8" Recess, for GT Tips
	GD510	Diffuser, Flush, for GT Tips
6.	B7392	Head Assembly, **Std.**
7.	B5253	Silicone Cap
8.	B5269	Body Tube 50°
8a.	B245	Body Tube 80°
9.	B5218	Spacer Kit w/ Screws
9a.	B608	Repl. Handle Screw
10.	B4617G	Insulator Spacer
11.	B260	Handle Kit
12.	B422	Trigger Switch Assembly
13.	B418	Trigger Switch Screw
14.	B5213	End Fitting
15.	B4305	Cone Nut
16.	B4991	Clamp, Conduit
17.	B457	Trigger Terminal
18.	B7669	Clamp, Jacket

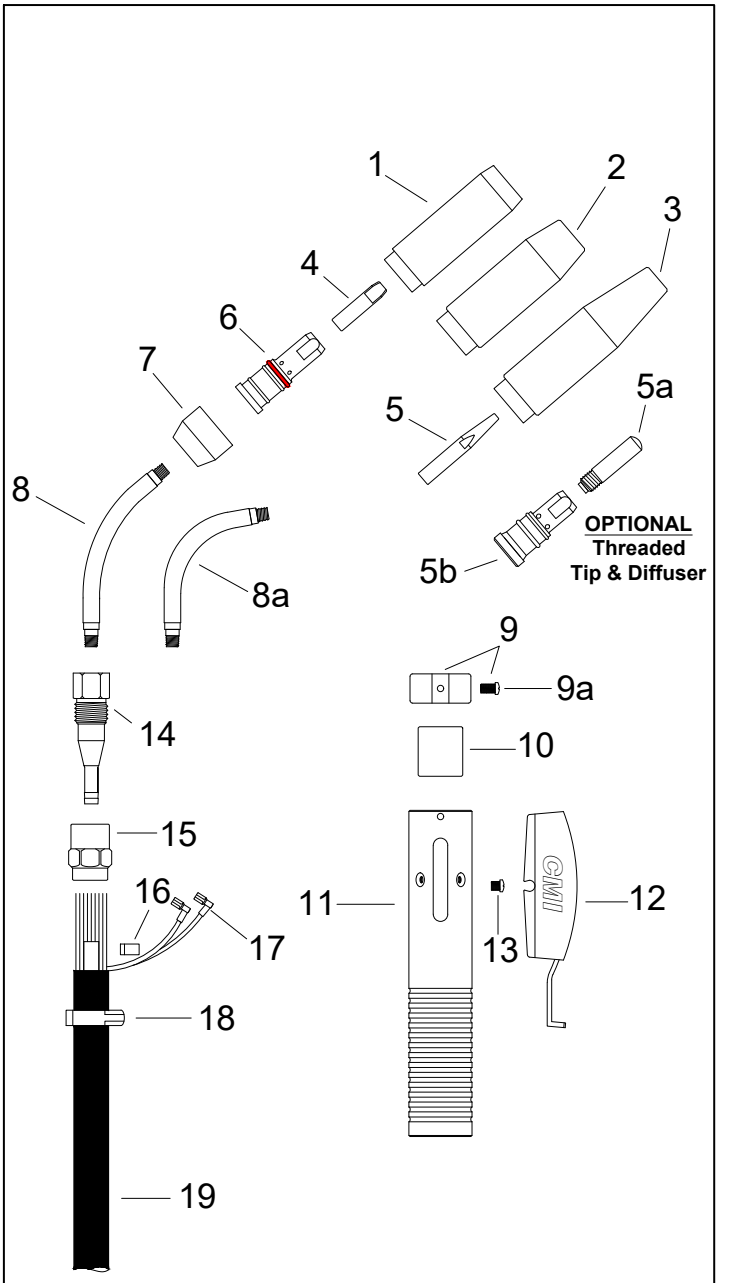

CM INDUSTRIES® INC.

COPYRIGHT © 2025 CM INDUSTRIES, INC. ALL RIGHTS RESERVED

#	Part Number	Description
19.	B1060109	300A Cable Assembly, 10'
	B1060110	300A Cable Assembly, 12'
	B1060111	300A Cable Assembly, 15'
	B1060112	300A Cable Assembly, 20'
	B1060113	300A Cable Assembly, 25'
20.	B2520041-S	Strain Relief Spring
21.	B2520066	Strain Relief Kit
22.	B2280056	Screw
23.	300-05-001	Electrical Plug, Miller
24.	300-05-002	Electrical Plug, Lincoln
25.	B1010027	Adaptor Block
26.	B2200101	Power Pin, Miller
27.	B4477	Power Pin Tip, Miller .023" - .045"
	B4477-564	Power Pin Tip, Miller .052" - 5/64"
28.	B4478	O-Ring, Miller
29.	B2200118	Power Pin, Tweco 4, Lincoln LF & Power Feed
30.	B4713	O-Ring, Tweco 4
31.	C44C	Set Screw
32.	B2200099	Power Pin, Lincoln LN
33.	B8631	Gas Hose Nipple
34.	401-00-001	Euro Connector Nut
35.	B5060	Euro Connector Plug
36.	B4421	O-Ring, Euro
37.	B2520041-S	Strain Relief Spring
38.	B1880074	Rigid Strain Relief Kit
39.	B4925	Locking Sleeve
40.	B4901	Quick Connect Body
41.	B4924	Lead Wire
42.	B4919	Gas Pin Assembly
43.	B4916	Wave Spring
44.	B4912	Snap Ring, Small
45.	B4911	Snap Ring, Large
46.	B2200008	Power Pin, Bernard EZ
	B1199	Bernard Quick Disconnect Kit (39-46)
47.	B43015	Liner Assembly, 15', .023"- .035"
	B43115	Liner Assembly, 15', .035"- .045"
	B43125	Liner Assembly, 25', .035"- .045"
	B43215	Liner Assembly, 15', .045"- .062"
	B43225	Liner Assembly, 25', .045"- .062"
	B43115X	Teflon Liner Assembly, 15', .035"- 3/64"
48.	B1983Q	300A Rear Cone Nut Repair Kit

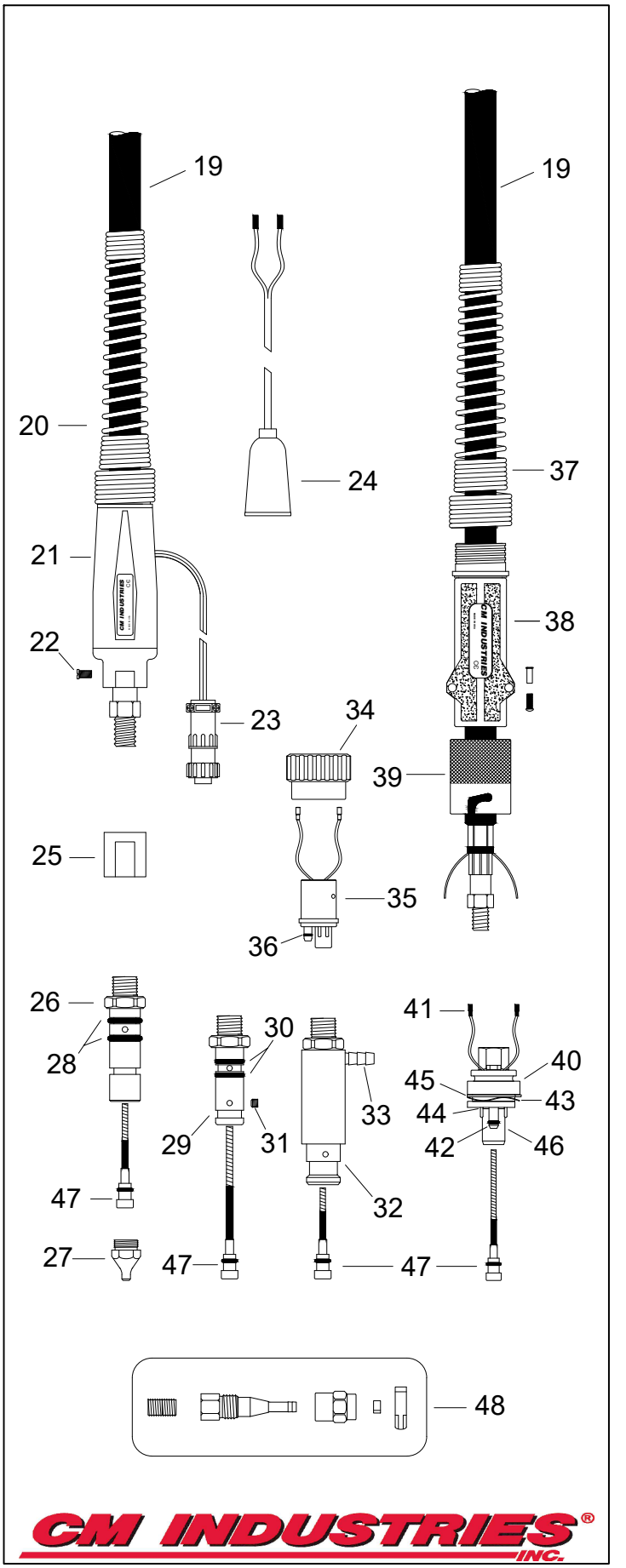

COPYRIGHT © 2025 CM INDUSTRIES, INC. ALL RIGHTS RESERVED

BND 400-H

AIR-COOLED MIG GUN

Replacement Suitable for Bernard®

RATING	GUN ORDERING PART NUMBER		GUN PLUG Direct Connect
	Bottom Trigger	Top Trigger	
400 Amp CO2 @ 100% Duty Cycle **300 Amp Mixed Gas @ 100% Duty Cycle** **Wire Capacity: 0.035" (0.9mm) - 5/64" (2.0mm)**	B54xxA	B54xxA-TT	**Bernard®**
	B54xxAE	B54xxAE-TT	**Euro**
	B54xxAL	B54xxAL-TT	**Lincoln® LN**
	B54xxALF	B54xxALF-TT	**Lincoln® LF & Power Feed**
	B54xxAM	B54xxAM-TT	**Miller®**
	B54xxAT	B54xxAT-TT	**Tweco®**
	xx = Standard lengths of 10, 12, 15, 20 and 25 ft. Custom lengths also available.		

#	Part Number	Description
1.	B4491	Nozzle - Brass 3/4" I.D., **Std.**
	B4591	Nozzle - Copper 3/4" I.D.
	B4591HD	Nozzle - Copper, Heavy Duty 3/4" I.D.
	B4492	Nozzle - Brass 9/16" I.D.
	B4495	Nozzle - Brass 5/8" I.D.
	B4592	Nozzle - Copper 9/16" I.D.
	B4592HD	Nozzle - Copper, Heavy Duty 9/16" I.D.
2.	B1589	Contact Tip, Long, .035" 0.9mm
	B1596	Contact Tip, Long, .040" 1.0mm
	B1590	Contact Tip, Long, .045" 1.2mm
	B1598	Contact Tip, Long, .052" 1.4mm
	B1591	Contact Tip, Long, 1/16" 1.6mm
	B1592	Contact Tip, Long, 5/64" 2.0mm
2a.	B7489	Contact Tip, .035" 0.9mm
	B7496	Contact Tip, .040" 1.0mm
	B7490	Contact Tip, .045" 1.2mm, **Std.**
	B7498	Contact Tip, .052" 1.4mm
	B7491	Contact Tip, 1/16" 1.6mm
	B7492	Contact Tip, 5/64" 2.0mm
3.	GT030H	Contact Tip, H.D. Threaded, .030" 0.8mm
	GT035H	Contact Tip, H.D. Threaded, .035" 0.9mm
	GT040H	Contact Tip, H.D. Threaded, .040" 1.0mm
	GT045H	Contact Tip, H.D. Threaded, .045" 1.2mm
	GT364H	Contact Tip, H.D. Threaded, 3/64" 1.3mm
	GT052H	Contact Tip, H.D. Threaded, .052" 1.4mm
	GT116H	Contact Tip, H.D. Threaded, 1/16" 1.6mm
	GT564H	Contact Tip, H.D. Threaded, 5/64" 2.0mm
4.	GD118	Diffuser, 1/8" Recess, for GT Tips
	GD100	Diffuser, Flush, for GT Tips
5.	B4635	Head Assembly, for Long Contact Tip
	B4635-116	Head Assembly w/ Tube
6.	B4435	Head Assembly, **Std.**
	B4435-116	Head Assembly w/ Tube
7.	B4423R	Silicone Cap
8.	B5469	Body Tube Assembly
9.	B1518	Spacer Kit
9a.	B608	Handle Screw
10.	B4617	Insulator Spacer
11.	B408	Handle Kit
12.	B422	Trigger Switch Assembly
13.	B418	Trigger Switch Screw
14.	B4466	End Fitting
15.	B4416	Cone Nut

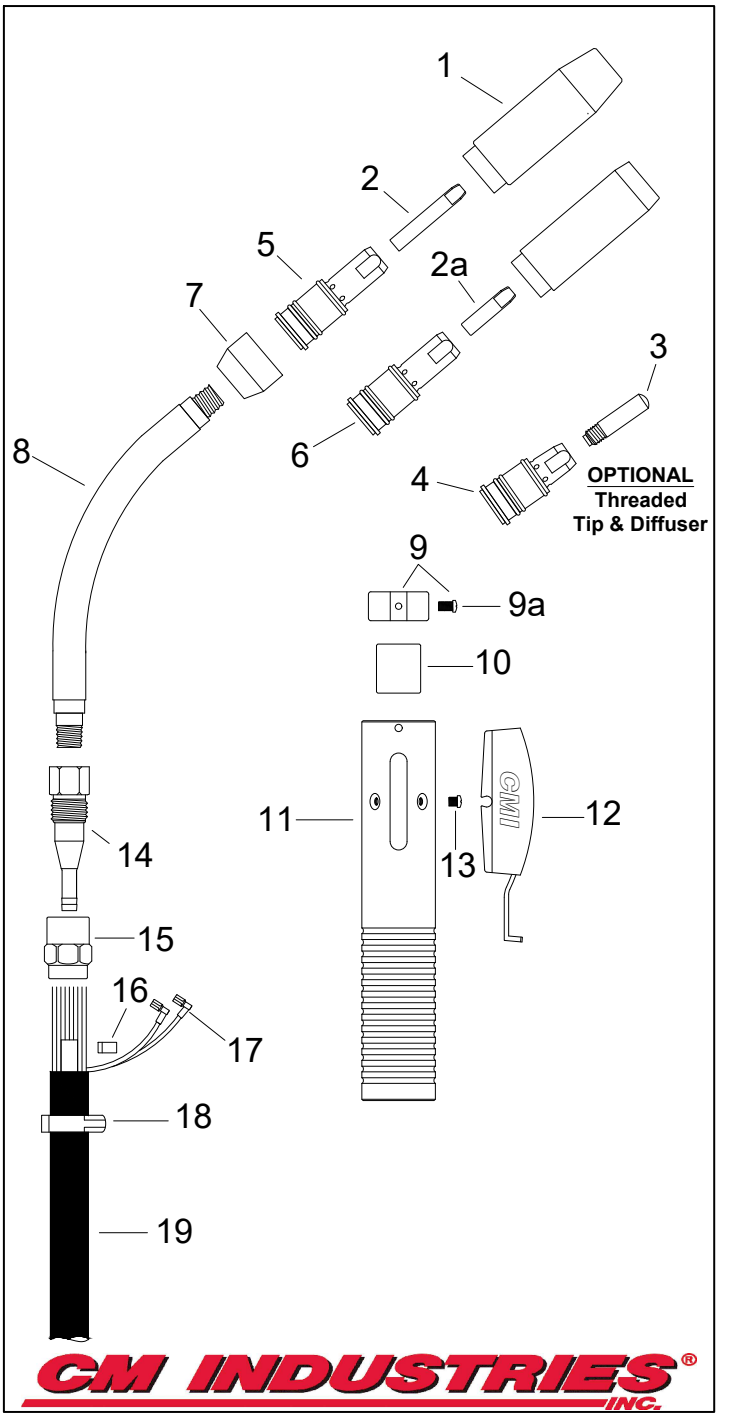

COPYRIGHT © 2025 CM INDUSTRIES, INC. ALL RIGHTS RESERVED

#	Part Number	Description
16.	B4992	Clamp, Conduit
17.	B457	Trigger Terminal
18.	B683	Clamp, Jacket
19.	B1060115	400A Cable Assembly, 10'
	B1060116	400A Cable Assembly, 12'
	B1060117	400A Cable Assembly, 15'
	B1060118	400A Cable Assembly, 20'
	B1060119	400A Cable Assembly, 25'
20.	B2520041-S	Strain Relief Spring
21.	B2520066	Strain Relief Kit
22.	B2280056	Screw
23.	300-05-001	Electrical Plug, Miller
24.	300-05-002	Electrical Plug, Lincoln
25.	B1010027	Adaptor Block
26.	B2200101	Power Pin, Miller
27.	B4477	Power Pin Tip, Miller .023" - .045"
	B4477-564	Power Pin Tip, Miller .052" - 5/64"
28.	B4478	O-Ring, Miller
29.	B2200118	Power Pin, Tweco 4, Lincoln LF & Power Feed
30.	B4713	O-Ring, Tweco 4
31.	C44C	Set Screw
32.	B2200099	Power Pin, Lincoln LN
33.	B8631	Gas Hose Nipple
34.	401-00-001	Euro Connector Nut
35.	B5060	Euro Connector Plug
36.	B4421	O-Ring, Euro
37.	B2520041-S	Strain Relief Spring
38.	B1880074	Rigid Strain Relief Kit
39.	B4925	Locking Sleeve
40.	B4901	Quick Connect Body
41.	B4924	Lead Wire
42.	B4919	Gas Pin Assembly
43.	B4916	Wave Spring
44.	B4912	Snap Ring, Small
45.	B4911	Snap Ring, Large
46.	B2200008	Power Pin, Bernard EZ
	B1199	Bernard Quick Disconnect Kit (Items 39-46)
47.	B44115	Liner Assembly, 15', .035"- .045"
	B44125	Liner Assembly, 25', .035"- .045"
	B44215	Liner Assembly, 15', .045"- .062"
	B44225	Liner Assembly, 25', .045"- .062"
	B44315	Liner Assembly, 15', 5/64"
	B44325	Liner Assembly, 25', 5/64"
	B44215X	Teflon Liner Assembly, 15', .045"- .062"
48.	B1984Q	400A Rear Cone Nut Repair Kit

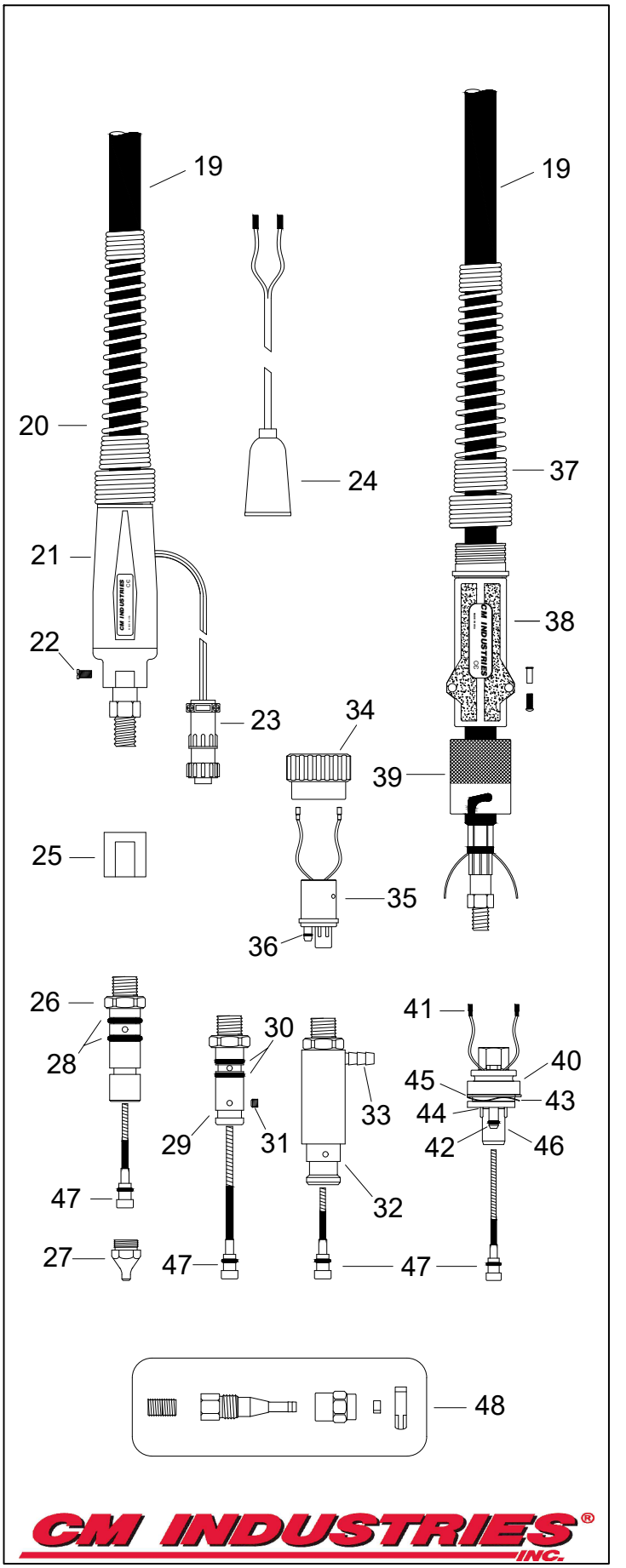

COPYRIGHT © 2025 CM INDUSTRIES, INC. ALL RIGHTS RESERVED

BND 600-F

AIR-COOLED MIG GUN

Replacement Suitable for Bernard®

RATING	GUN ORDERING PART NUMBER		GUN PLUG Direct Connect
	Bottom Trigger	Top Trigger	
600 Amp CO2 @ 100% Duty Cycle	B46xx	B46xx-TT	**Bernard®**
	B46xxE	B46xxE-TT	**Euro**
450 Amp Mixed Gas @ 100% Duty Cycle	B46xxL	B46xxL-TT	**Lincoln® LN**
	B46xxLF	B46xxLF-TT	**Lincoln® LF & Power Feed**
	B46xxM	B46xxM-TT	**Miller®**
Wire Capacity: 0.035" (0.9mm) - 7/64" (2.8mm)	B46xxW	B46xxW-TT	**Tweco® #5**
	xx = Standard lengths of 10, 12, 15, 20 and 25 ft. Custom lengths also available.		

#	Part Number	Description
1.	B4491	Nozzle - Brass 3/4" I.D.
	B4591	Nozzle - Copper 3/4" I.D., **Std.**
	B4591HD	Nozzle - Copper, Heavy Duty 3/4" I.D.
	B4492	Nozzle - Brass 9/16" I.D.
	B4495	Nozzle - Brass 5/8" I.D.
	B4592	Nozzle - Copper 9/16" I.D.
	B4592HD	Nozzle - Copper, Heavy Duty 9/16" I.D.
2.	B1589	Contact Tip, Long, .035" 0.9mm
	B1596	Contact Tip, Long, .040" 1.0mm
	B1590	Contact Tip, Long, .045" 1.2mm
	B1598	Contact Tip, Long, .052" 1.4mm
	B1591	Contact Tip, Long, 1/16" 1.6mm
	B1592	Contact Tip, Long, 5/64" 2.0mm
	B1593	Contact Tip, Long, 3/32" 2.4mm, **Std.**
	B1594	Contact Tip, Long, 7/64" 2.8mm
2a.	B7489	Contact Tip, .035" 0.9mm
	B7496	Contact Tip, .040" 1.0mm
	B7490	Contact Tip, .045" 1.2mm
	B7498	Contact Tip, .052" 1.4mm
	B7491	Contact Tip, 1/16" 1.6mm
	B7492	Contact Tip, 5/64" 2.0mm
	B7493	Contact Tip, 3/32" 2.4mm
	B7494	Contact Tip, 7/64" 2.8mm
3.	GT035H	Contact Tip, H.D. Threaded, .035" 0.9mm
	GT040H	Contact Tip, H.D. Threaded, .040" 1.0mm
	GT045H	Contact Tip, H.D. Threaded, .045" 1.2mm
	GT364H	Contact Tip, H.D. Threaded, 3/64" 1.3mm
	GT052H	Contact Tip, H.D. Threaded, .052" 1.4mm
	GT116H	Contact Tip, H.D. Threaded, 1/16" 1.6mm
	GT564H	Contact Tip, H.D. Threaded, 5/64" 2.0mm
	GT332H	Contact Tip, H.D. Threaded, 3/32" 2.4mm
4.	GD118	Diffuser, 1/8" Recess, for GT Tips
	GD100	Diffuser, Flush, for GT Tips
5.	B4635	Head Assembly, for Long Contact Tip, **Std.**
	B4635-116	Head Assembly w/ Tube, for Long Contact Tip
6.	B4435	Head Assembly
	B4435-116	Head Assembly w/ Tube
7.	B4423R	Silicone Cap
8.	B4627	Body Tube
9.	B1518	Spacer Kit
9a.	B608	Repl. Handle Screw
10.	B4617	Insulator Spacer
11.	B408	Handle Kit
12.	B422	Trigger Switch Assembly
13.	B418	Trigger Switch Screw
14.	B4613M	End Fitting
15.	B4616	Cone Nut
16.	B4992	Clamp, Conduit
17.	B457	Trigger Terminal

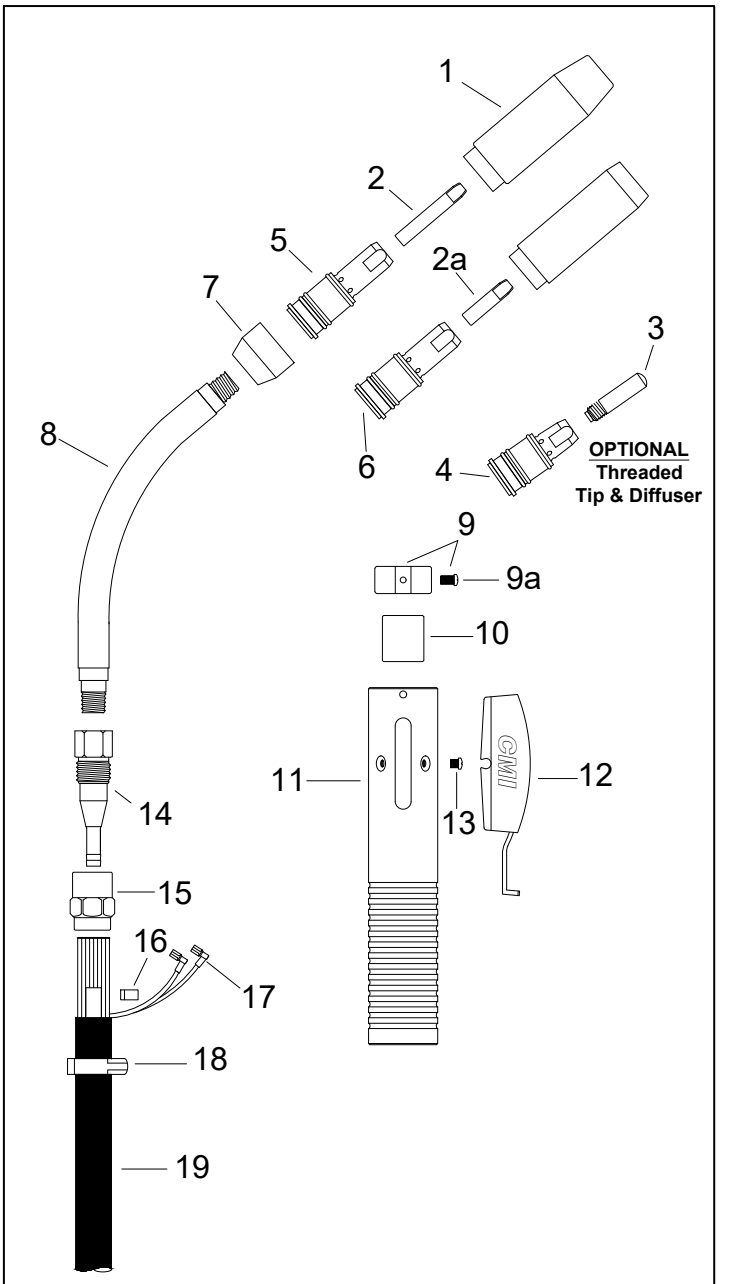

CM INDUSTRIES INC.®

COPYRIGHT © 2025 CM INDUSTRIES, INC. ALL RIGHTS RESERVED

#	Part Number	Description
18.	B683	Clamp, Jacket
19.	B600	600A Cable, Bulk
20.	B2520041	Strain Relief Spring
21.	B2520066	Strain Relief Kit
22.	B2280056	Screw
23.	B4613M	End Fitting, w/ Male Thread
24.	300-05-001	Electrical Plug, Miller
25.	300-05-002	Electrical Plug, Lincoln
26.	B1010027	Adaptor Block
27.	B2200101	Power Pin, Miller
28.	B4477	Power Pin Tip, Miller .023" - .045"
	B4477-564	Power Pin Tip, Miller .052" - 5/64"
	B4474	Power Pin Tip, Miller 3/32" - 7/64"
29.	B4478	O-Ring, Miller
30.	B2200118	Power Pin, Tweco 4, Lincoln LF & Power Feed
31.	B4713	O-Ring, Tweco 4
32.	C44C	Set Screw
33.	B2200099	Power Pin, Lincoln LN
34.	B8631	Gas Hose Nipple
35.	401-00-001	Euro Connector Nut
36.	B5060	Euro Connector Plug
37.	B4421	O-Ring, Euro
38.	B2520041	Strain Relief Spring
39.	B1880074	Rigid Strain Relief Kit
40.	B4925	Locking Sleeve
41.	B4901	Quick Connect Body
42.	B4924	Lead Wire
43.	B4919	Gas Pin Assembly
44.	B4916	Wave Spring
45.	B4912	Snap Ring, Small
46.	B4911	Snap Ring, Large
47.	B2200008	Power Pin, Bernard EZ
	B1199	Bernard Quick Disconnect Kit (Items 40-47)
48.	B44115	Liner Assembly, 15', .035"- .045"
	B44215	Liner Assembly, 15', .045"- 1/16"
	B44315	Liner Assembly, 15', 5/64"
	B45415	Liner Assembly, 15', 3/32"
	B46415	Liner Assembly, 15', 7/64"
	B44125	Liner Assembly, 15', .035"- .045"
	B44225	Liner Assembly, 15', .045"- 1/16"
	B44325	Liner Assembly, 15', 5/64"
	B45425	Liner Assembly, 15', 3/32"
	B45625	Liner Assembly, 15', 7/64"

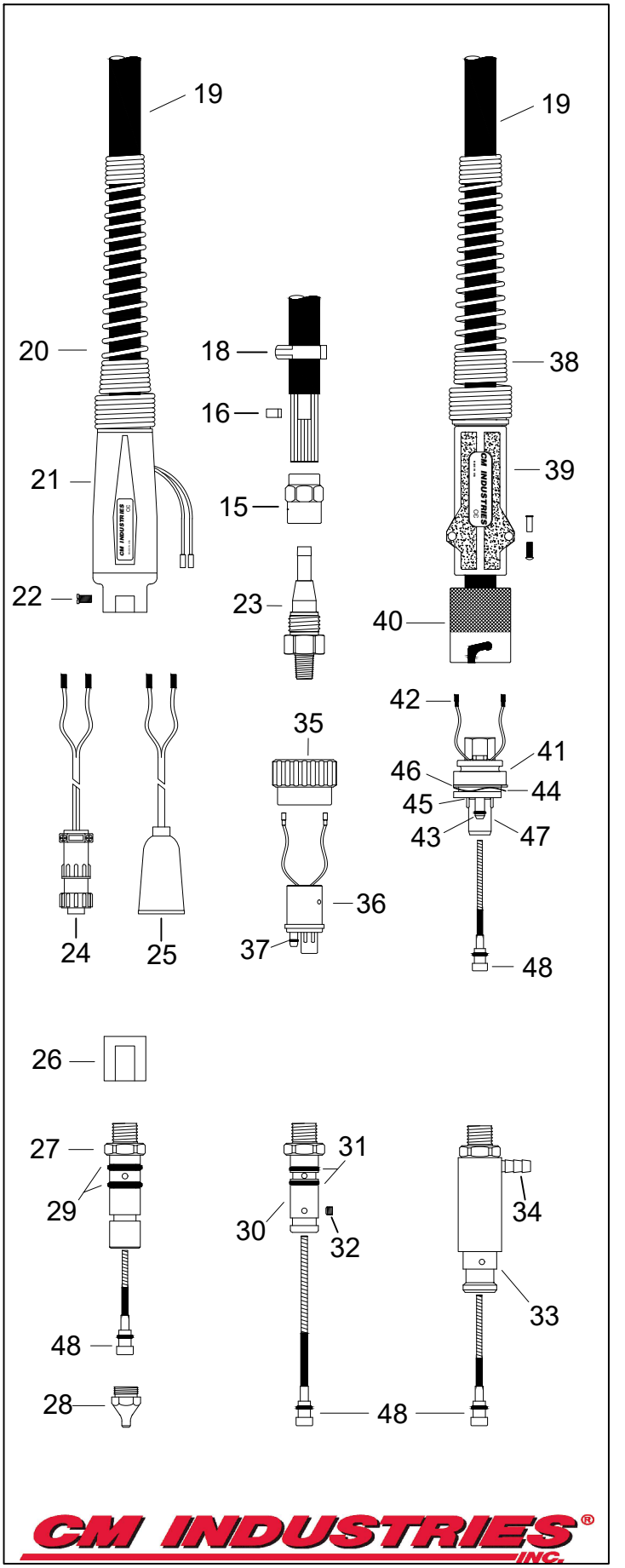

COPYRIGHT © 2025 CM INDUSTRIES, INC. ALL RIGHTS RESERVED

T250

AIR-COOLED MIG GUN

Replacement Suitable for Bernard® BTB

RATING	GUN ORDERING PART NUMBER		GUN PLUG Direct Connect
	.035"	.045"	
250 Amp CO2 @ 80% Duty Cycle **200 Amp Mixed Gas @ 80% Duty Cycle** **Wire Capacity: 0.023" (0.6mm) - 0.045" (1.2mm)**	R25xx-35 RE25xx-35 RLF25xx-35 RLPM25xx-35 RM25xx-35	R25xx-45 RE25xx-45 RLF25xx-45 RLPM25xx-45 RM25xx-45	**Tweco® #4** **Euro** **Lincoln® LF/ Power Feed** **Lincoln® Power MIG** **Miller®**
	xx = Standard lengths of 10, 12, 15, 20 and 25 ft. Custom lengths also available.		

#	Part Number	Description
1.	R401-4-38	Nozzle, 3/8", Flush Tip
	R401-4-50	Nozzle, 1/2", 1/8" Tip Recess, **Std.**
	R401-4-62	Nozzle, 5/8", 1/8" Tip Recess
	R401-4-75	Nozzle, 3/4", 1/8" Tip Recess
	CM "Taper-LOCK" Contact Tips	
2.	155-1-030	H.D. Contact Tip, .030" (0.8mm)
	155-1-035	H.D. Contact Tip, .035" (0.9mm)
	155-1-040	H.D. Contact Tip, .040" (1.0mm)
	155-1-045	H.D. Contact Tip, .045" (1.2mm)
	155-1-364	H.D. Contact Tip, 3/64" (1.2mm)
3.	155-2-030	H.D. Tapered Contact Tip, .030" (0.8mm)
	155-2-035	H.D. Tapered Contact Tip, .035" (0.9mm)
	155-2-040	H.D. Tapered Contact Tip, .040" (1.0mm)
	155-2-045	H.D. Tapered Contact Tip, .045" (1.2mm)
	155-2-364	H.D. Tapered Contact Tip, 3/64" (1.2mm)
4.	154-R505	H.D. Diffuser, for CM Taper-LOCK Tips, **Std.**
5.	154-R506	Tapered Diffuser, for CM Taper-LOCK Tips
6.	R402-7	Gooseneck Insulator, **Std.**
	R402-11	Gooseneck Insulator, H.D.
7.	R205-45	Gooseneck 250A, 45°
	R205-60	Gooseneck 250A, 60°, **Std**.
8.	R210-100	Handle
9.	246-376	Trigger
10.	R210-102	Handle Post & Screw
11.	R210-103	Screw
12.	R412-1	Switch Lead Connector
13.	R213-10	Unicable Assembly, 10'
	R213-12	Unicable Assembly, 12'
	R213-15	Unicable Assembly, 15'

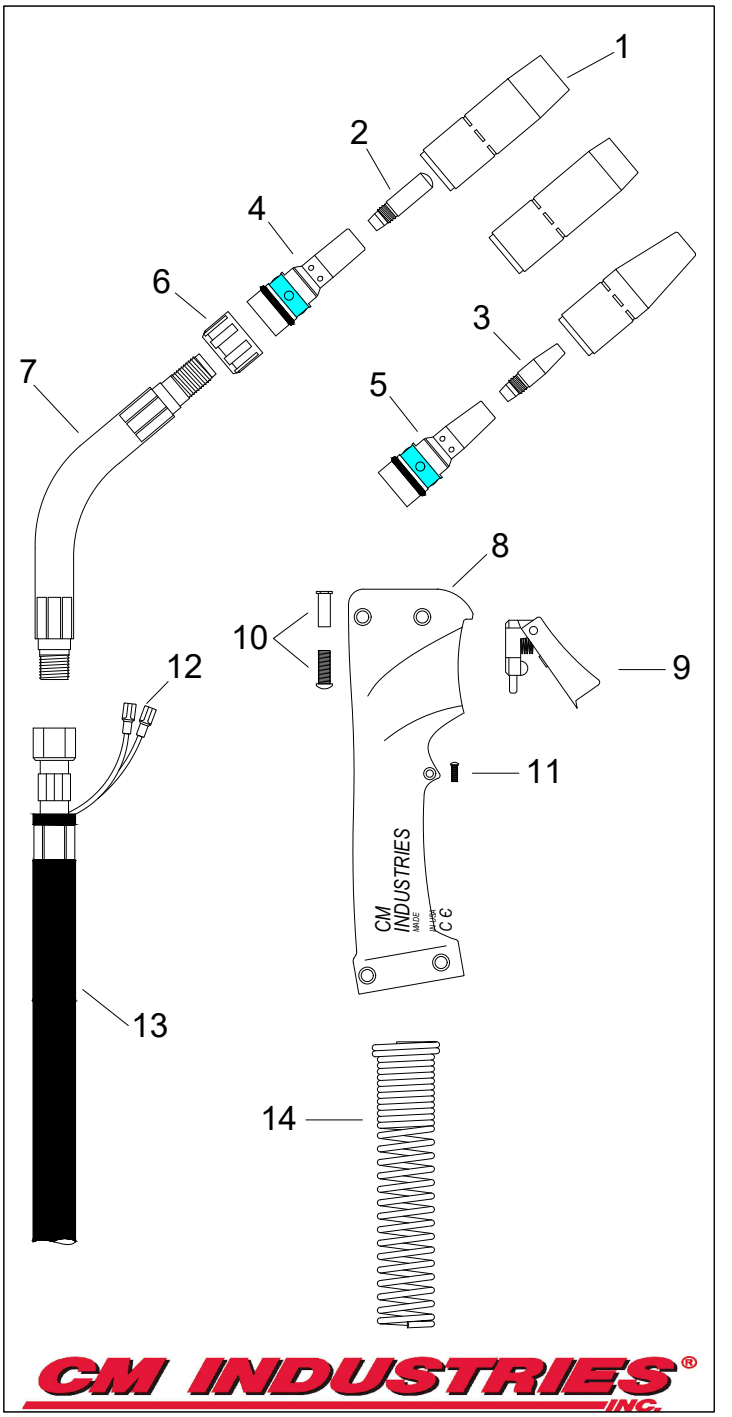

CM INDUSTRIES® INC.

COPYRIGHT © 2025 CM INDUSTRIES, INC. ALL RIGHTS RESERVED

#	Part Number	Description
14.	185-36-001	Cable Support Spring
15.	260-25-002	Adaptor Support
16.	285-01-001	Screw
17.	R414-200	Power Pin Block, 250
18.	R214	Power Pin, Tweco #4
19.	R414-1	O-Ring, Tweco #4
20.	C44C	Liner Set Screw
21.	R214-2	Power Pin, Lincoln, LN
22.	R214-1	Power Pin, Miller
23.	R414-11-2	O-Ring, Miller
24.	R214-116	Guide Cap, Miller .035"-1/16" Wire
25.	401-00-001	Adaptor Nut
26.	R425-10CM	Power Pin, Euro
27.	285-00-002	O-Ring, Euro
28.	300-05-001	Electrical Plug, Miller
29.	300-05-002	Electrical Plug, Lincoln LF/ LN/ Power Feed
30.	R415-23-15	Liner Assembly, 15' .023"
	R415-30-15	Liner Assembly, 15' .030"
	R415-35-15	Liner Assembly, 15' .035"-.045", Std.
	R415-116-15	Liner Assembly, 15' .045"-1/16"
	R415-35-2	Liner Assembly, 15', .035"-3/64", Aluminum
	R415-116-2	Liner Assembly, 15', 3/64"-1/16", Aluminum
	R415-35-0	Teflon Liner Assy., 15', .035"-3/64", Aluminum
	R415-116-0	Teflon Liner Assy., 15', 3/64"-1/16", Aluminum
	R415-35-25	Liner Assembly, 25', .035"-.045"
	R415-116-25	Liner Assembly, 25', .045"-1/16"

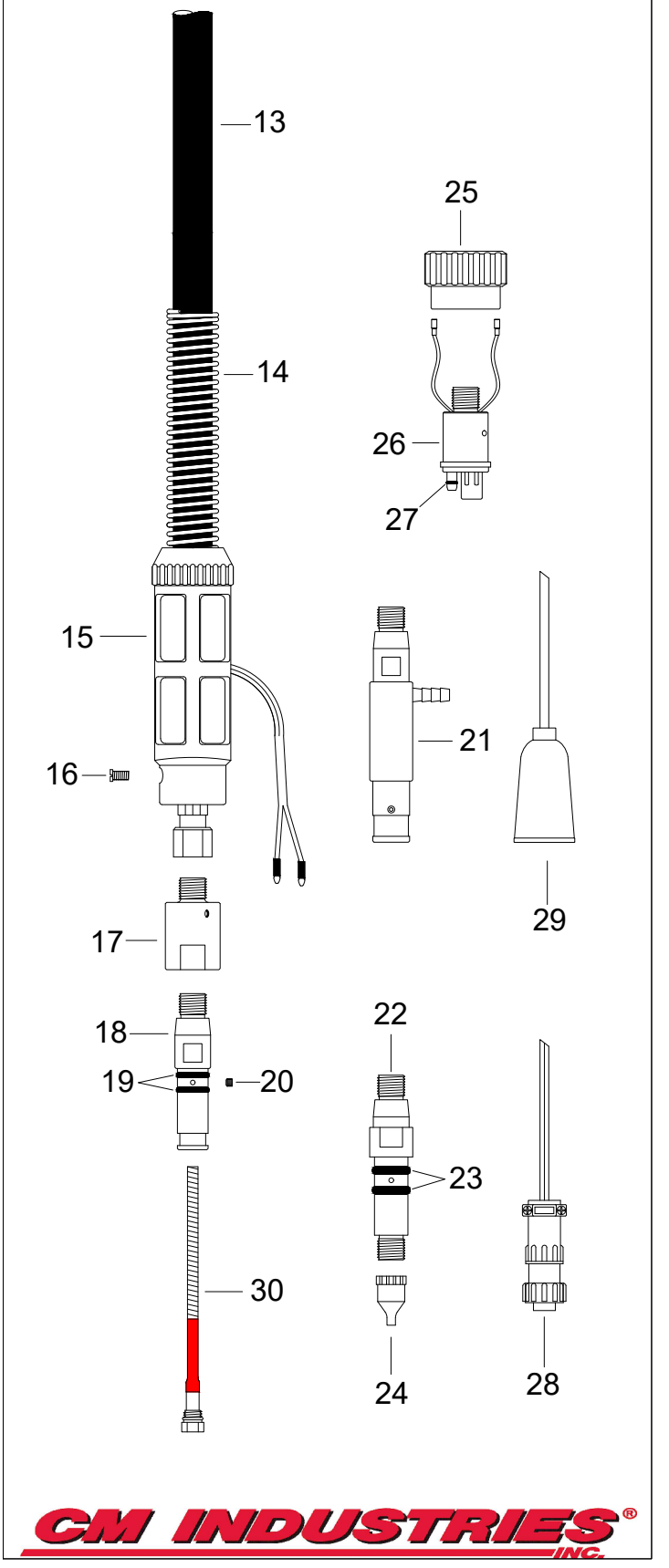

COPYRIGHT © 2025 CM INDUSTRIES, INC. ALL RIGHTS RESERVED

T300

AIR-COOLED MIG GUN

Replacement Suitable for Bernard® BTB

**** For Gun Part Numbers See Configurator on Page 19 ****

RATING	Factory Installed Consumables			
	Style	**Contact Tip**	**Diffuser**	**Nozzle**
300 Amp CO2 @ 100% Duty Cycle **300 Amp Mixed Gas @ 60% Duty Cycle** **Wire Capacity: 0.030" (0.8mm) - 0.062" (1.6mm)**	**CM Taper-Lock™**	155-1-xx	154-R505	152-10-62C
	Centerfire™	T-xxx	DS-1	NS-5818C
	Quik Tip™	T1xxx	D118Q	N1C58Q
	Tough Lock™	R403-20-xx	R404-26	R401-4-62

#	Consumable Options	
1-3.	**CM Taper-LOCK™**	See Pages 6-7
1-3.	**Centerfire™**	See Page 8
1-3.	**Tough Lock™**	See Pages 9-11
1-3.	**Quik Tip™**	See Page 12

#	Part Number	Description
4.	R402-11	Neck Insulator
5.	R305-45	Gooseneck Assy., 45°, Short
	R305-60	Gooseneck Assy., 60°, Short, **Most Common**
	R405-45	Gooseneck Assy., 45°, Medium
	R405-60	Gooseneck Assy., 60°, Medium
	R505-45	Gooseneck Assy., 45°, Long
	R505-60	Gooseneck Assy., 60°, Long
6.	B4423R	Neck Insulator (for Q Necks)
7.	BQT3-30	Q Neck Assy., 30°, Medium
	BQT3-45	Q Neck Assy., 45°, Medium
	BQT3-60	Q Neck Assy., 60°, Medium
	BQT3-80	Q Neck Assy., 80°, Medium
	BQT5-30	Q Neck Assy., 30°, Long
	BQT5-45	Q Neck Assy., 45°, Long
	BQT5-60	Q Neck Assy., 60°, Long
	BQT5-80	Q Neck Assy., 80°, Long
7a.	B1840057	Repl. Plastic Lock Nut
7b.	B1840031	Repl. Silicone Rubber Seal
8.	B4780	Insulator Hex Nut, Optional
9.	B1680085	Neck Adapter (for Q Necks)
10.	R412-1	Switch Lead Connector
11.	R411-3	Mounting Screw
12.	R411-2	Switch Housing
13.	R411-1	Switch
14.	R410	Handle
15.	R513-2	Spring Guard

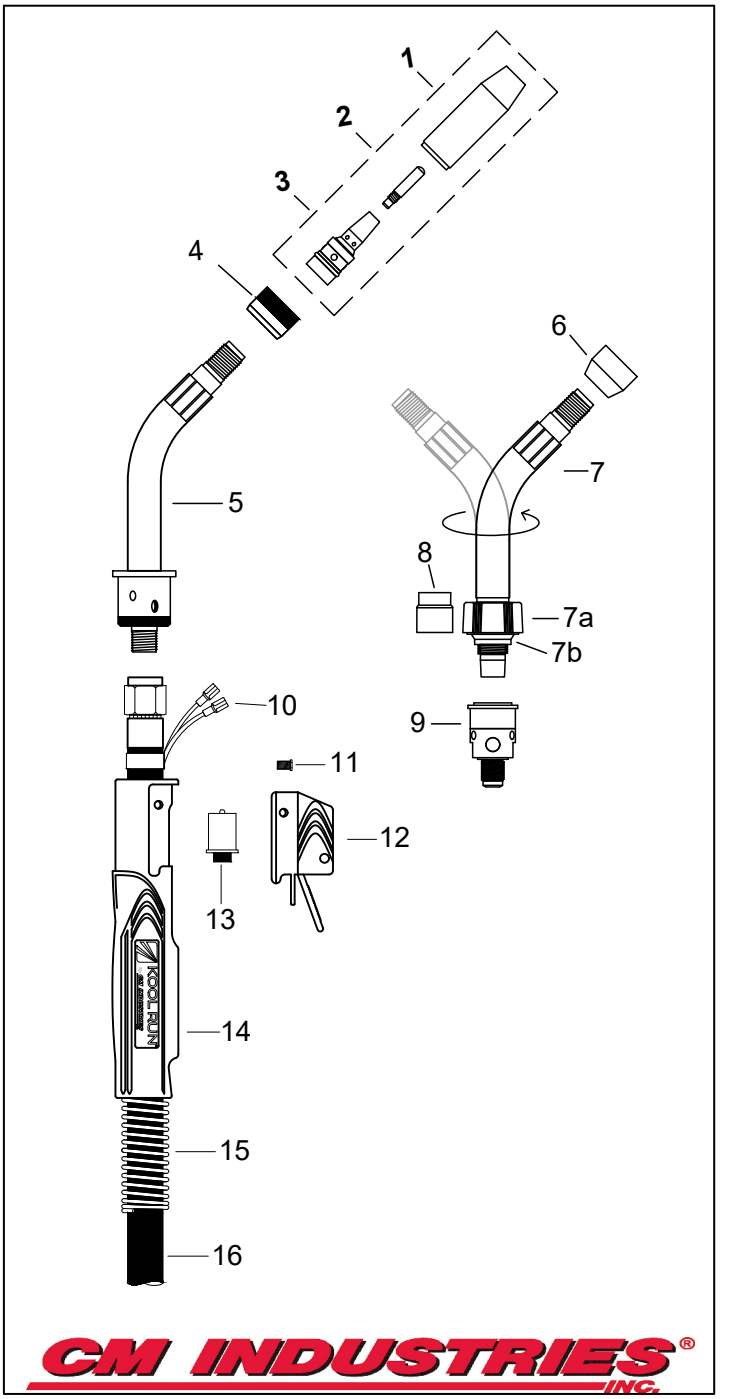

CM INDUSTRIES® INC.

COPYRIGHT © 2025 CM INDUSTRIES, INC. ALL RIGHTS RESERVED

#	Part Number	Description
16.	R313-10	Unicable Assy. w/ Handle, 10'
	R313-12	Unicable Assy. w/ Handle, 12'
	R313-15	Unicable Assy. w/ Handle, 15'
	R313-20	Unicable Assy. w/ Handle, 20'
	R313-25	Unicable Assy. w/ Handle, 25'
17.	B2520041-S	Strain Relief Spring
18.	B2520066	Strain Relief Kit
19.	B2280056	Support Screw
20.	R414-400CM	Power Pin, Block
21.	R214	Power Pin w/ O-Rings, Tweco #4
22.	R414-1	O-Ring, Tweco #4
23.	C44C	Set Screw
24.	R214-1	Power Pin w/ O-Rings, Miller
25.	R414-11-2	O-Ring, Miller
26.	R214-116	Power Pin Cap, Miller .035"-1/16" Wire
27.	R214-2	Power Pin, Lincoln LN
28.	B8631	Repl. Gas Hose Nipple
29.	401-00-001	Adaptor Nut
30.	R425-10CM	Power Pin, Euro
31.	285-00-002	O-Ring, Euro
32.	300-05-001	Electrical Plug, Miller
33.	300-05-002	Electrical Plug, Lincoln LF, LN, Power Feed
34.	L2A-15	Liner Assembly, 15', .030"- .035"
	L3A-15	Liner Assembly, 15', .035"- .045"
	L4A-15	Liner Assembly, 15', .045"- 1/16"
	L2A-25	Liner Assembly, 25', .030"- .035"
	L3A-25	Liner Assembly, 25', .035"- .045"
	L4A-25	Liner Assembly, 25', .045"- 1/16"
	R415-23-15	Liner Assembly, 15', .023"
	R415-30-15	Liner Assembly, 15', .030"
	R415-35-15	Liner Assembly, 15', .035"-.045"
	R415-116-15	Liner Assembly, 15', .045"-1/16"
	R415-35-2	Liner Assembly, 15', .035"-3/64" Aluminum
	R415-116-2	Liner Assembly, 15', 3/64"-1/16" Aluminum
	R415-35-0	Teflon Liner Assy.,15', .035"-3/64", Aluminum
	R415-116-0	Teflon Liner Assy., 15', 3/64"-1/16", Aluminum
	R415-35-25	Liner Assembly, 25', .035"-.045"
	R415-116-25	Liner Assembly, 25', .045"-1/16"

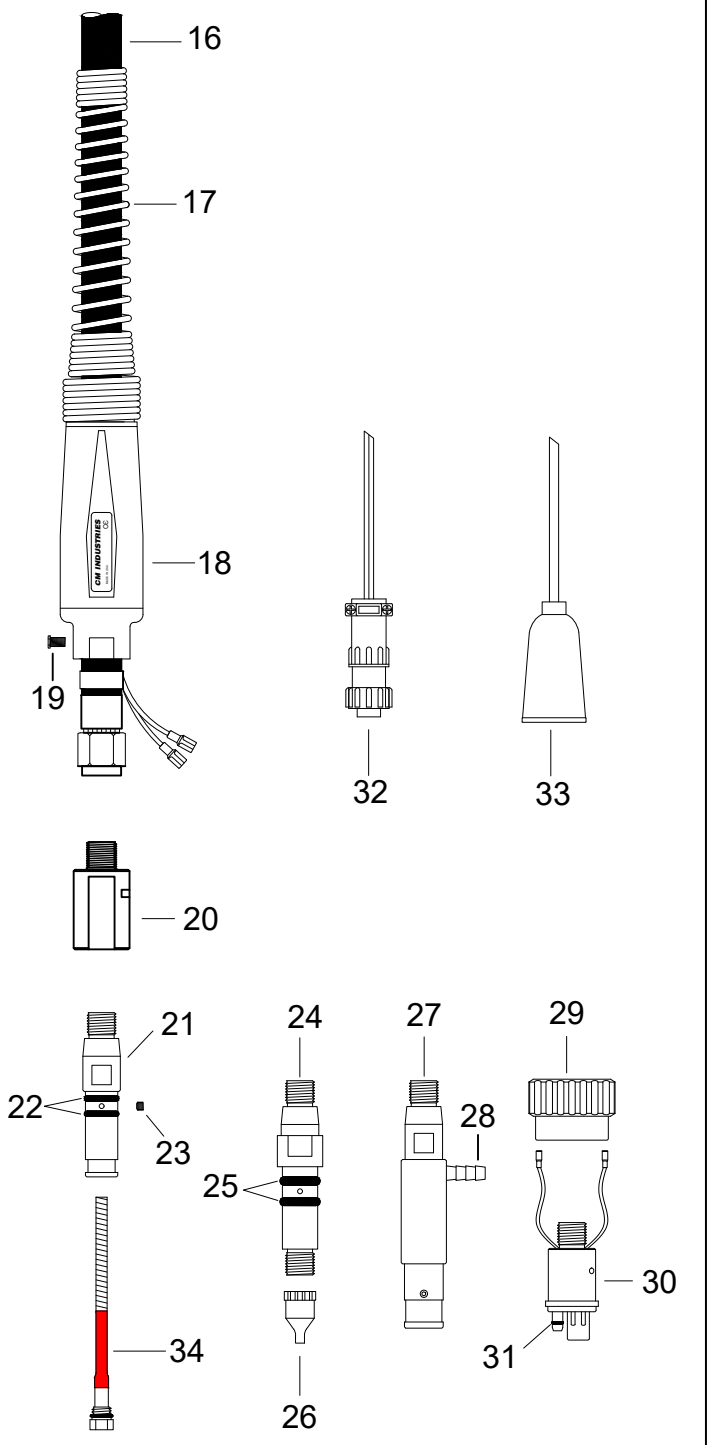

COPYRIGHT © 2025 CM INDUSTRIES, INC. ALL RIGHTS RESERVED

T400

AIR-COOLED MIG GUN

Replacement Suitable for Bernard® BTB

**** For Gun Part Numbers See Configurator on Page 19 ****

RATING	Factory Installed Consumables			
	Style	**Contact Tip**	**Diffuser**	**Nozzle**
400 Amp CO2 @ 100% Duty Cycle **400 Amp Mixed Gas @ 60% Duty Cycle** **Wire Capacity: 0.030" (0.8mm) - 3/32" (2.4mm)**	**CM Taper-Lock™**	155-1-xx	154-R505	152-30-62C
	Centerfire™	T-xxx	D-1	N-5818C
	Quik Tip™	T1xxx	D118Q	N1C58HQ
	Tough Lock™	R403-20-xx	R404-26	R401-6-62

#	Consumable Options	
1-3.	**CM Taper-LOCK™**	See Pages 6-7
1-3.	**Centerfire™**	See Page 8
1-3.	**Tough Lock™**	See Pages 9-11
1-3.	**Quik Tip™**	See Page 12

#	Part Number	Description
4.	R402-11	Neck Insulator
5.	R305-45	Gooseneck Assy., 45°, Short
	R305-60	Gooseneck Assy., 60°, Short
	R405-45	Gooseneck Assy., 45°, Medium
	R405-60	Gooseneck Assy., 60°, Medium, **Most Common**
	R505-45	Gooseneck Assy., 45°, Long
	R505-60	Gooseneck Assy., 60°, Long
6.	B4423R	Neck Insulator (for Q Necks)
7.	BQT3-30	Q Neck Assy., 30°, Medium
	BQT3-45	Q Neck Assy., 45°, Medium
	BQT3-60	Q Neck Assy., 60°, Medium
	BQT3-80	Q Neck Assy., 80°, Medium
	BQT5-30	Q Neck Assy., 30°, Long
	BQT5-45	Q Neck Assy., 45°, Long
	BQT5-60	Q Neck Assy., 60°, Long
	BQT5-80	Q Neck Assy., 80°, Long
7a.	B1840057	Repl. Plastic Lock Nut
7b.	B1840031	Repl. Silicone Rubber Seal
8.	B4780	Insulator Hex Nut, Optional
9.	B1680085	Neck Adapter (for Q Necks)
10.	B1680088	End Fitting
11.	B1540003	Cone Nut

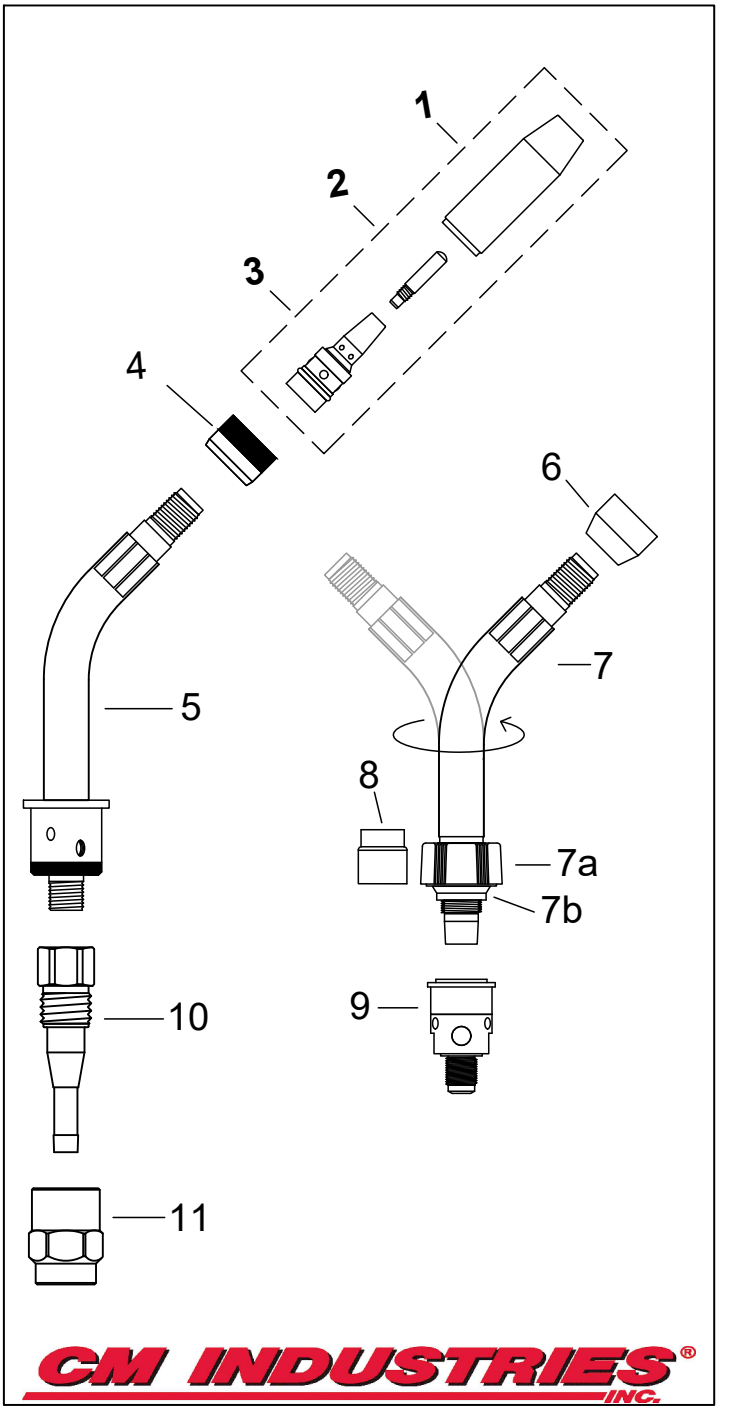

CM INDUSTRIES® INC.

COPYRIGHT © 2025 CM INDUSTRIES, INC. ALL RIGHTS RESERVED

#	Part Number	Description
12.	R413-5	Inner Tube Clamp
13.	R412-1	Switch Lead Connector
14.	R413-1	Outer Jacket Clamp
15.	R411-3	Mounting Screw
16.	R411-2	Switch Housing
17.	R411-1	Switch
18.	R410	Handle, Front
19.	R513-2	Spring Guard, Front
20.	R413-10CM	Unicable Assy. w/ Handle, 10'
	R413-12CM	Unicable Assy. w/ Handle, 12'
	R413-15CM	Unicable Assy. w/ Handle, 15'
	R413-20CM	Unicable Assy. w/ Handle, 20'
	R413-25CM	Unicable Assy. w/ Handle, 25'
21.	B2520041-S	Strain Relief Spring
22.	B2520066	Strain Relief Kit
23.	B2280056	Support Screw
24.	R414-400CM	Adapter Block
25.	R214	Power Pin, Tweco #4
26.	R414-1	O-Ring, Tweco #4
27.	C44C	Liner Set Screw
28.	R214-1	Power Pin w/ O-Rings, Miller
29.	R414-11-2	O-Ring, Miller
30.	R214-116	Power Pin Cap, Miller .035"-1/16" Wire
	R214-332	Power Pin Cap, Miller 5/64"-13/32" Wire
31.	R214-2	Power Pin, Lincoln LN
32.	B8631	Repl. Gas Hose Nipple
33.	401-00-001	Adaptor Nut
34.	R425-10CM	Power Pin, Euro
35.	285-00-002	O-Ring, Euro
36.	300-05-001	Electrical Plug, Miller
37.	300-05-002	Electrical Plug, Lincoln LF, LN, Power Feed
38.	L2A-15	Liner Assembly, 15', .030"- .035"
	L3A-15	Liner Assembly, 15', .035"- .045"
	L4A-15	Liner Assembly, 15', .045"- 1/16"
	L2A-25	Liner Assembly, 25', .030"- .035"
	L3A-25	Liner Assembly, 25', .035"- .045"
	L4A-25	Liner Assembly, 25', .045"- 1/16"
	R415-30-15	Liner Assembly, 15', .030"
	R415-35-15	Liner Assembly, 15', .035"-.045"
	R415-116-15	Liner Assembly, 15', .045"-1/16"
	R415-564-15	Liner Assembly, 15', 1/16-5/64"
	R415-332-15	Liner Assembly, 15', 5/64-3/32"
	R415-35-2	Liner Assembly, 15', .035"-3/64", Aluminum
	R415-116-2	Liner Assembly, 15', 3/64"-1/16", Aluminum
	R415-35-0	Teflon Liner Assy., 15',.035"-3/64" Aluminum
	R415-116-0	Teflon Liner Assy., 15', 3/64"-1/16" Aluminum
	R415-35-25	Liner Assembly, 25', .035"-.045"
	R415-116-25	Liner Assembly, 25', .045"-1/16"
	R415-564-25	Liner Assembly, 25', 1/16-5/64"
	R415-332-25	Liner Assembly, 25', 5/64-3/32"

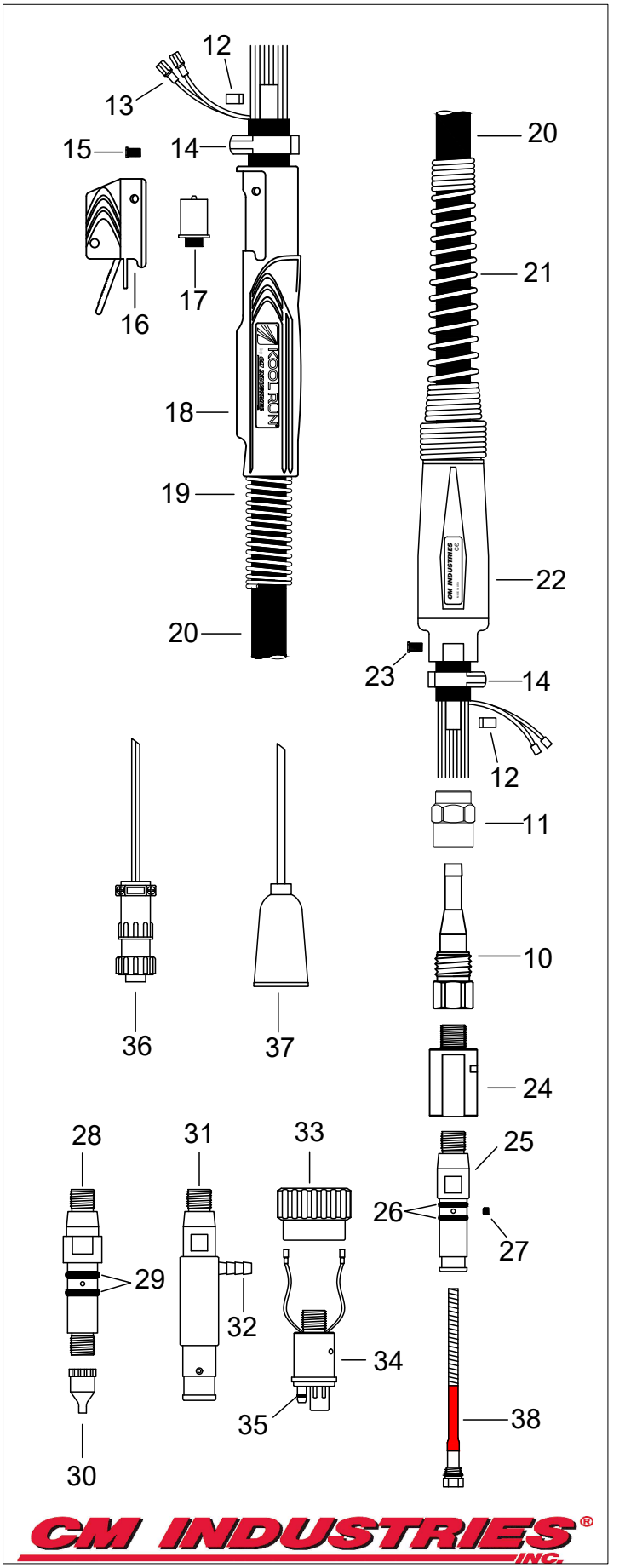

COPYRIGHT © 2025 CM INDUSTRIES, INC. ALL RIGHTS RESERVED

T500

AIR-COOLED MIG GUN

Replacement Suitable for Bernard® BTB

** For Gun Part Numbers See Configurator on Page 19 **

RATING	Factory Installed Consumables			
	Style	Contact Tip	Diffuser	Nozzle
500 Amp CO2 @ 100% Duty Cycle 500 Amp Mixed Gas @ 60% Duty Cycle Wire Capacity: 0.035" (0.9mm) - 3/32" (2.4mm)	CM Taper-Lock™	155-1-xx	154-R505	152-30-62C
	Centerfire™	T-xxx	D-1	N-5814C
	Quik Tip™	T1xxx	D114Q	N1C34HQ
	Tough Lock™	R403-20-xx	R404-26	R401-6-62

#	Consumable Options	
1-3.	**CM Taper-LOCK™**	See Pages 6-7
1-3.	**Centerfire™**	See Page 8
1-3.	**Tough Lock™**	See Pages 9-11
1-3.	**Quik Tip™**	See Page 12

#	Part Number	Description
4.	R402-11	Neck Insulator
5.	R305-45	Gooseneck Assy., 45°, Short
	R305-60	Gooseneck Assy., 60°, Short
	R405-45	Gooseneck Assy., 45°, Medium
	R405-60	Gooseneck Assy., 60°, Medium, **Common**
	R505-45	Gooseneck Assy., 45°, Long
	R505-60	Gooseneck Assy., 60°, Long, **Common**
6.	B4423R	Neck Insulator (for Q Necks)
7.	BQT3-30	Q Neck Assy., 30°, Medium
	BQT3-45	Q Neck Assy., 45°, Medium
	BQT3-60	Q Neck Assy., 60°, Medium
	BQT3-80	Q Neck Assy., 80°, Medium
	BQT5-30	Q Neck Assy., 30°, Long
	BQT5-45	Q Neck Assy., 45°, Long
	BQT5-60	Q Neck Assy., 60°, Long
	BQT5-80	Q Neck Assy., 80°, Long
7a.	B1840057	Repl. Plastic Lock Nut
7b.	B1840031	Repl. Silicone Rubber Seal
8.	B4780	Insulator Hex Nut, Optional
9.	B1680085	Neck Adapter (for Q Necks)
10.	B1680089	End Fitting
11.	B1540004	Cone Nut

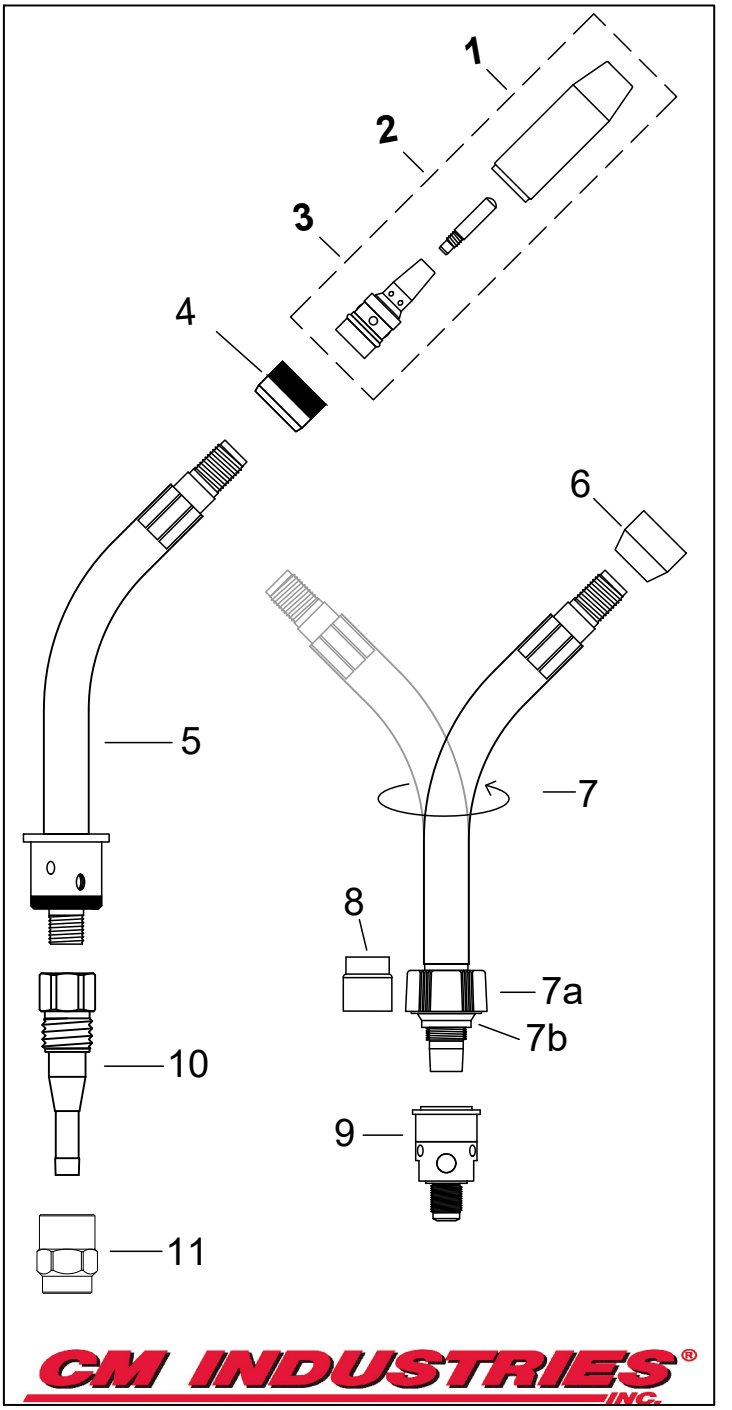

CM INDUSTRIES® INC.

COPYRIGHT © 2025 CM INDUSTRIES, INC. ALL RIGHTS RESERVED

#	Part Number	Description
12.	B4993	Inner Tube Clamp
13.	R412-1	Switch Lead Connector
14.	B4944	Outer Jacket Clamp
15.	R411-3	Mounting Screw
16.	R411-2	Switch Housing
17.	R411-1	Switch
18.	R410	Handle, Front
19.	R513-2	Spring Guard, Front
20.	R515-10CM	Unicable Assy. w/ Front Handle & Springs, 10'
	R515-12CM	Unicable Assy. w/ Front Handle & Springs, 12'
	R515-15CM	Unicable Assy. w/ Front Handle & Springs, 15'
	R515-20CM	Unicable Assy. w/ Front Handle & Springs, 20'
	R515-25CM	Unicable Assy. w/ Front Handle & Springs, 25'
21.	B2520041-S	Strain Relief Spring
22.	B2520066	Strain Relief Kit
23.	B2280056	Support Screw
24.	R414-400CM	Adapter Block
25.	R214	Power Pin, Tweco #4
26.	R414-1	O-Ring, Tweco #4
27.	C44C	Liner Set Screw
28.	R214-1	Power Pin w/ O-Rings, Miller
29.	R414-11-2	O-Ring, Miller
30.	R214-116	Power Pin Cap, Miller .035"-1/16" Wire
	R214-332	Power Pin Cap, Miller 5/64"-13/32" Wire
31.	R214-2	Power Pin, Lincoln LN
32.	B8631	Repl. Gas Hose Nipple
33.	401-00-001	Adaptor Nut
34.	R425-10CM	Power Pin, Euro
35.	285-00-002	O-Ring, Euro
36.	300-05-001	Electrical Plug, Miller
37.	300-05-002	Electrical Plug, Lincoln LF, LN, Power Feed
38.	L3A-15	Liner Assembly, 15', .035"- .045"
	L4A-15	Liner Assembly, 15', .045"- 1/16"
	L6A-15	Liner Assembly, 15', 5/64" - 3/32"
	L3A-25	Liner Assembly, 25', .035"- .045"
	L4A-25	Liner Assembly, 25', .045"- 1/16"
	L6A-25	Liner Assembly, 25', 5/64" - 3/32"
	R415-35-15	Liner Assembly, 15', .035"-.045"
	R415-116-15	Liner Assembly, 15', .045"-1/16"
	R415-564-15	Liner Assembly, 15', 1/16-5/64"
	R415-332-15	Liner Assembly, 15', 5/64-3/32"
	R415-35-2	Liner Assembly, 15', .035"-3/64", Aluminum
	R415-116-2	Liner Assembly, 15', 3/64"-1/16", Aluminum
	R415-35-0	Teflon Liner Assy., 15',.035"-3/64" Aluminum
	R415-116-0	Teflon Liner Assy., 15', 3/64"-1/16" Aluminum
	R415-35-25	Liner Assembly, 25', .035"-.045"
	R415-116-25	Liner Assembly, 25', .045"-1/16"
	R415-564-25	Liner Assembly, 25', 1/16-5/64"
	R415-332-25	Liner Assembly, 25', 5/64-3/32"

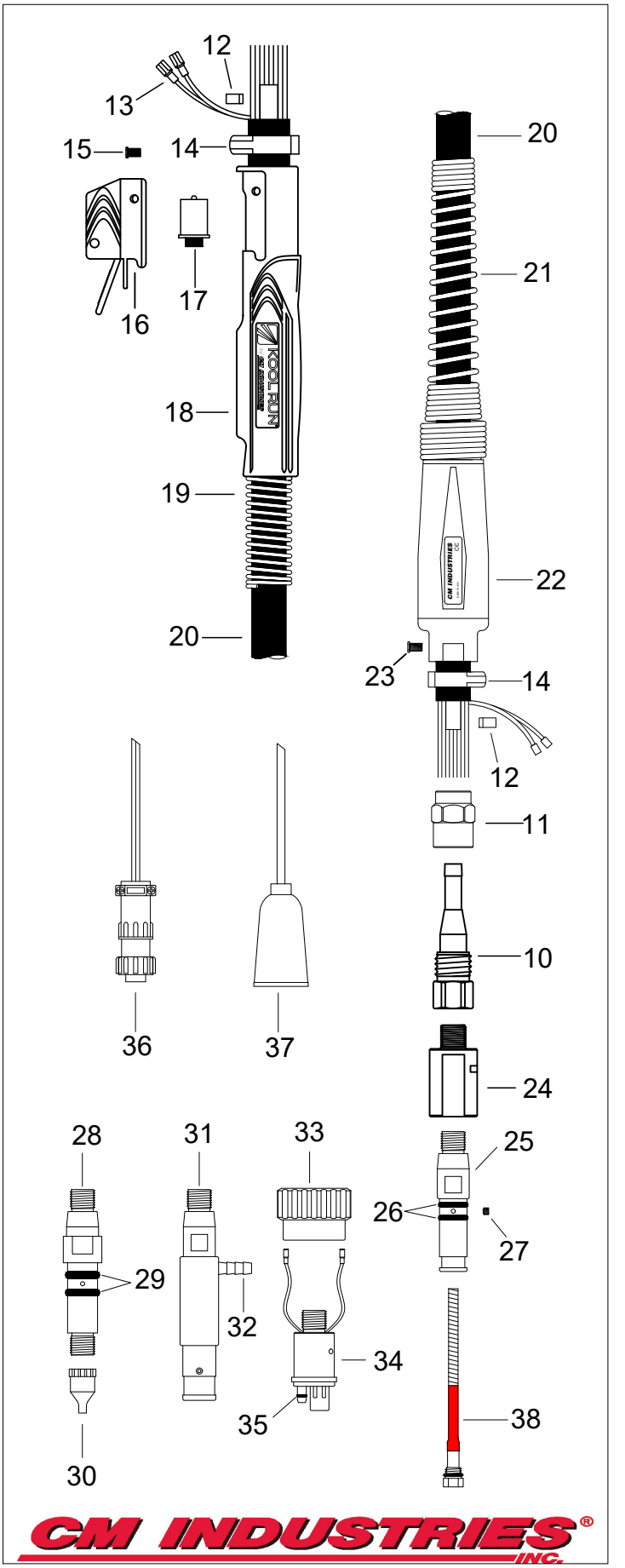

COPYRIGHT © 2025 CM INDUSTRIES, INC. ALL RIGHTS RESERVED

T600

AIR-COOLED MIG GUN

Replacement Suitable for Bernard® BTB

** For Gun Part Numbers See Configurator on Page 19 **

RATING	Factory Installed Consumables			
	Style	**Contact Tip**	**Diffuser**	**Nozzle**
600 Amp CO2 @ 100% Duty Cycle **600 Amp Mixed Gas @ 60% Duty Cycle** **Wire Capacity: 0.035" (0.9mm) - 3/32" (2.4mm)**	**CM Taper-Lock™**	155-1-xx	154-R505	152-30-75C
	Centerfire™	T-xxx	D-1	N-3418C
	Quik Tip™	T1xxx	D118Q	N1C34HQ
	Tough Lock™	R403-20-xx	R404-26	R401-6-75

#	Consumable Options	
1-3.	**CM Taper-LOCK™**	See Pages 6-7
1-3.	**Centerfire™**	See Page 8
1-3.	**Tough Lock™**	See Pages 9-11
1-3.	**Quik Tip™**	See Page 12

#	Part Number	Description
4.	R402-11	Neck Insulator
5.	R305-45	Gooseneck Assy., 45°, Short
	R305-60	Gooseneck Assy., 60°, Short
	R405-45	Gooseneck Assy., 45°, Medium
	R405-60	Gooseneck Assy., 60°, Medium, **Common**
	R505-45	Gooseneck Assy., 45°, Long
	R505-60	Gooseneck Assy., 60°, Long, **Common**
6.	B4423R	Neck Insulator (for Q Necks)
7.	BQT3-30	Q Neck Assy., 30°, Medium
	BQT3-45	Q Neck Assy., 45°, Medium
	BQT3-60	Q Neck Assy., 60°, Medium
	BQT3-80	Q Neck Assy., 80°, Medium
	BQT5-30	Q Neck Assy., 30°, Long
	BQT5-45	Q Neck Assy., 45°, Long
	BQT5-60	Q Neck Assy., 60°, Long
	BQT5-80	Q Neck Assy., 80°, Long
7a.	B1840057	Repl. Plastic Lock Nut
7b.	B1840031	Repl. Silicone Rubber Seal
8.	B4780	Insulator Hex Nut, Optional
9.	B1680085	Neck Adapter (for Q Necks)
10.	R608	End Fitting
11.	R609	Cone Nut

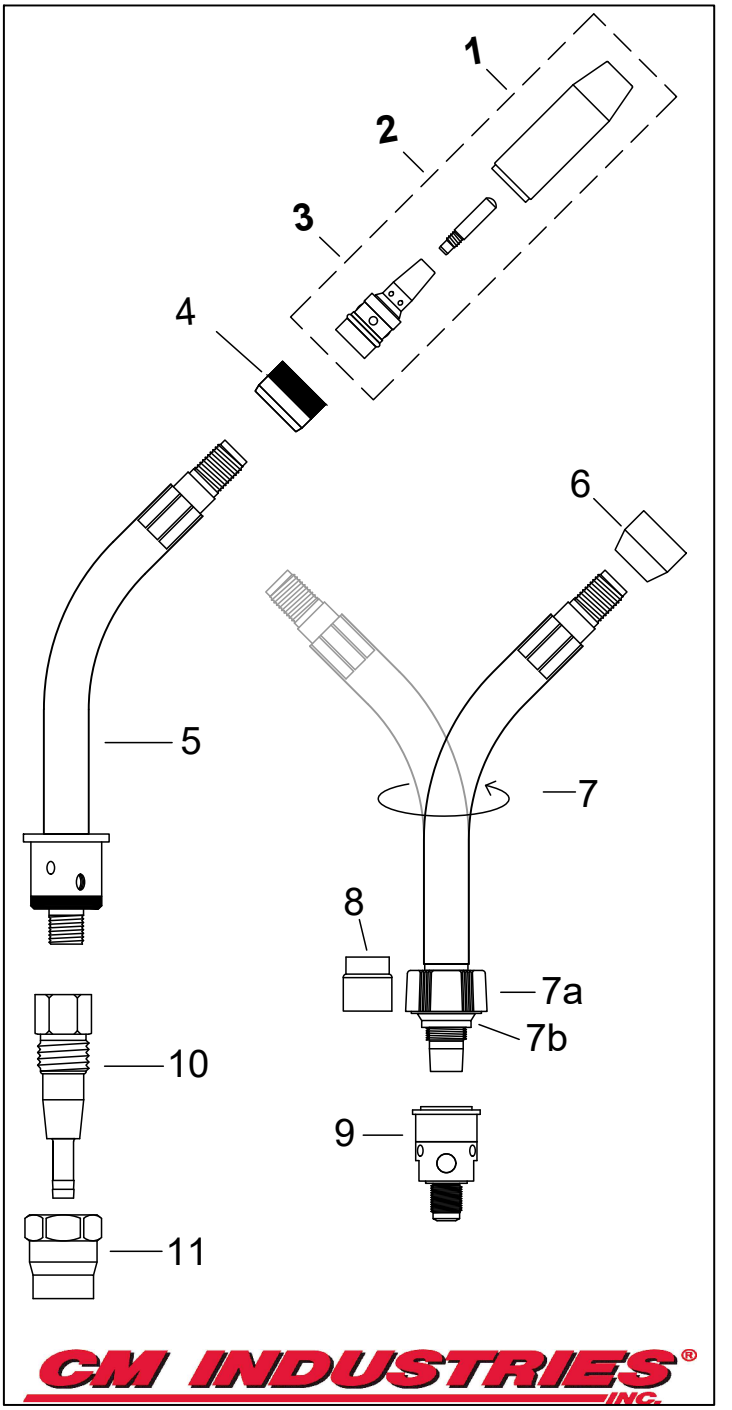

CM INDUSTRIES® INC.

COPYRIGHT © 2025 CM INDUSTRIES, INC. ALL RIGHTS RESERVED

#	Part Number	Description
12.	B4993	Inner Tube Clamp
13.	R412-1	Switch Lead Connector
14.	B4944	Outer Jacket Clamp
15.	R411-3	Mounting Screw
16.	R411-2	Switch Housing
17.	R411-1	Switch
18.	R610	Handle, Front
19.	185-52-001	Spring Guard, Front
20.	R515-10CM	Unicable Assy. w/ Front Handle & Springs, 10'
	R515-12CM	Unicable Assy. w/ Front Handle & Springs, 12'
	R515-15CM	Unicable Assy. w/ Front Handle & Springs, 15'
	R515-20CM	Unicable Assy. w/ Front Handle & Springs, 20'
	R515-25CM	Unicable Assy. w/ Front Handle & Springs, 25'
21.	B2520041	Strain Relief Spring
22.	B2520066	Strain Relief Kit
23.	B2280056	Support Screw
24.	R414-400CM	Power Pin Block
25.	R214	Power Pin, Tweco #4
26.	R414-1	O-Ring, Tweco #4
27.	C44C	Liner Set Screw
28.	R214-1	Power Pin w/ O-Rings, Miller
29.	R414-11-2	O-Ring, Miller
30.	R214-116	Power Pin Cap, Miller .035"-1/16" Wire
	R214-332	Power Pin Cap, Miller 5/64"-13/32" Wire
31.	R214-2	Power Pin, Lincoln LN
32.	B8631	Repl. Gas Hose Nipple
33.	401-00-001	Adaptor Nut
34.	R425-10CM	Power Pin, Euro
35.	285-00-002	O-Ring, Euro
36.	300-05-001	Electrical Plug, Miller
37.	300-05-002	Electrical Plug, Lincoln LF, LN, Power Feed
38.	L3A-15	Liner Assembly, 15', .035"- .045"
	L4A-15	Liner Assembly, 15', .045"- 1/16"
	L6A-15	Liner Assembly, 15', 5/64" - 3/32"
	L3A-25	Liner Assembly, 25', .035"- .045"
	L4A-25	Liner Assembly, 25', .045"- 1/16"
	L6A-25	Liner Assembly, 25', 5/64" - 3/32"
	R415-35-15	Liner Assembly, 15', .035"-.045"
	R415-116-15	Liner Assembly, 15', .045"-1/16"
	R415-564-15	Liner Assembly, 15', 1/16-5/64"
	R415-332-15	Liner Assembly, 15', 5/64-3/32"
	R415-35-2	Liner Assembly, 15', .035"-3/64", Aluminum
	R415-116-2	Liner Assembly, 15', 3/64"-1/16", Aluminum
	R415-35-0	Teflon Liner Assy., 15',.035"-3/64" Aluminum
	R415-116-0	Teflon Liner Assy., 15', 3/64"-1/16" Aluminum
	R415-35-25	Liner Assembly, 25', .035"-.045"
	R415-116-25	Liner Assembly, 25', .045"-1/16"
	R415-564-25	Liner Assembly, 25', 1/16-5/64"
	R415-332-25	Liner Assembly, 25', 5/64-3/32"

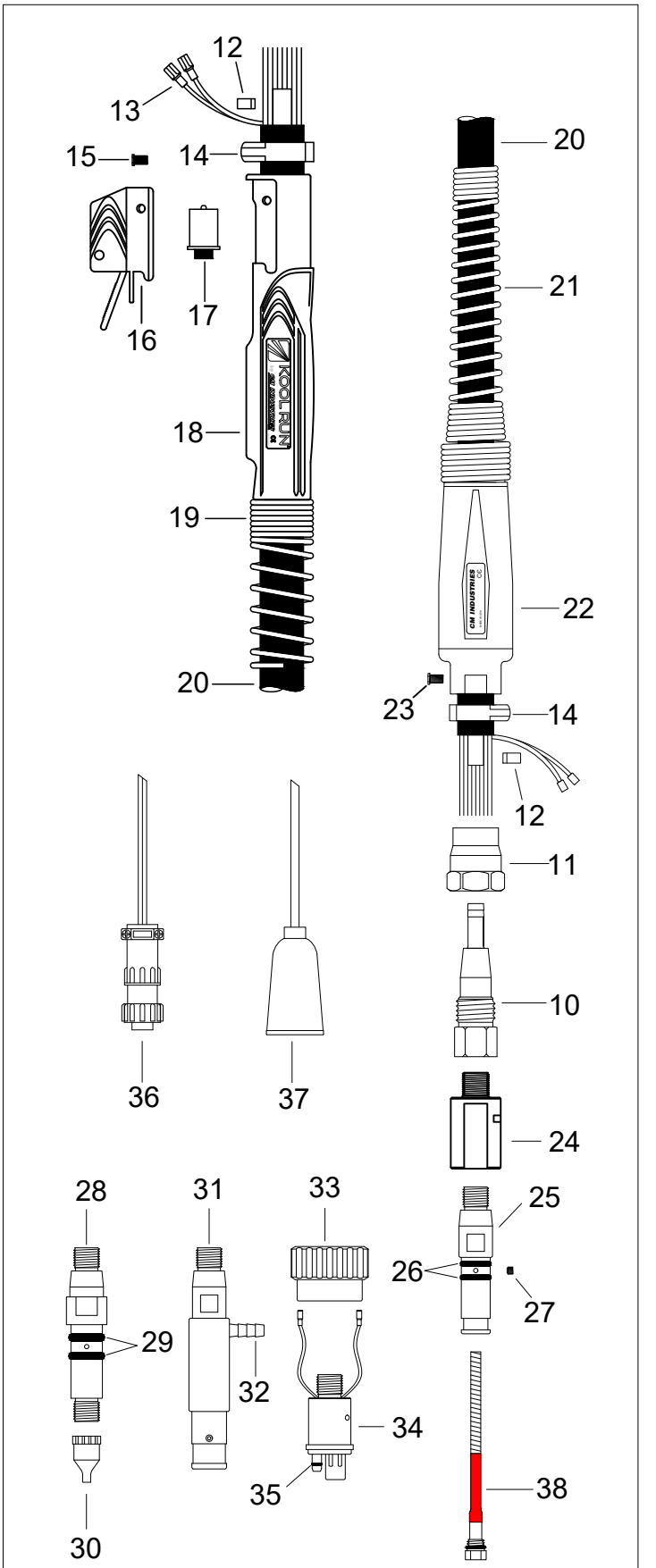

COPYRIGHT © 2025 CM INDUSTRIES, INC. ALL RIGHTS RESERVED

BNZ 14A & 15A AIR-COOLED MIG GUN

Replacement Suitable for Binzel®

RATING	GUN ORDERING PART NUMBER		GUN PLUG Direct Connect
	14A	15A	
160-180 Amp CO2 @ 60% Duty Cycle **140-150 Amp Mixed Gas @ 60% Duty Cycle** **Wire Capacity: 0.023" (0.6mm) - 0.045" (1.2mm)**	700-14-010	700-15-010	**Euro**
	700-14-C10	700-15-C10	**Century®**
	700-14-L10	700-15-L10	**Lincoln® LN**
	700-14-R10	700-15-R10	**Lincoln® PowerMIG**
	700-14-M10	700-15-M10	**Miller®**
	700-14-T10	700-15-T10	**Tweco® #4**
	xx = Standard lengths of 10, 12, 15, 20 and 25 ft. Custom lengths also available.		

#	Part Number	Description
1.	165-15-001	Nozzle, Conical, 1/2" I.D., **Std.**
2.	165-15-002	Nozzle, Cylindrical, 5/8" I.D.
3.	165-15-011	Nozzle, Conical Small, 3/8" I.D.
4.	165-15-003	Nozzle, Spot, 5/8" I.D.
5.	150-06-102	Contact Tip, M6, .024" 0.6mm
	150-08-102	Contact Tip, M6, .030" 0.8mm, **Std.**
	150-09-102	Contact Tip, M6, .035" 0.9mm
	150-10-102	Contact Tip, M6, .040" 1.0mm
	150-12-102	Contact Tip, M6, .045" 1.2mm
6.	035-14-006	Nozzle Holder, Gas Diffuser, Left Handed
6a.	035-15-001	Nozzle Spring
7.	051-13-445	Swan Neck Assembly, 45° Left Handed (14A)
7a.	051-15-445	Swan Neck Assembly, 45° Left Handed (15A)
	051-15-001	Swan Neck Assembly, Flexible (15A) (Includes items 6-10)
8.	046-15-010	Head Insulator
9.	290-01-010	Lock Nut, M10 x 1
10.	047-15-002	Repl. Boot
11.	290-01-014	Hex Coupler (14A)
11a.	290-01-015	Hex Coupler (15A)
12.	047-00-100	Body Insulator (15A)
13.	170-14-001	Handle Assembly w/out Switch (14A)
13a.	170-14-100	Trigger Switch (14A)
14.	170-66-005	Handle Screw (15A)
15.	170-66-009	Handle Post (15A)
16.	170-66-002	Handle Assembly Complete w/ Screws (15A)
16a.	170-66-000	Trigger Only (15A)
17.	185-36-001	Cable Support Spring (15A)
18.	300-05-003	Trigger Wire Connector (14A)
	300-05-004	Trigger Wire Connector (15A)

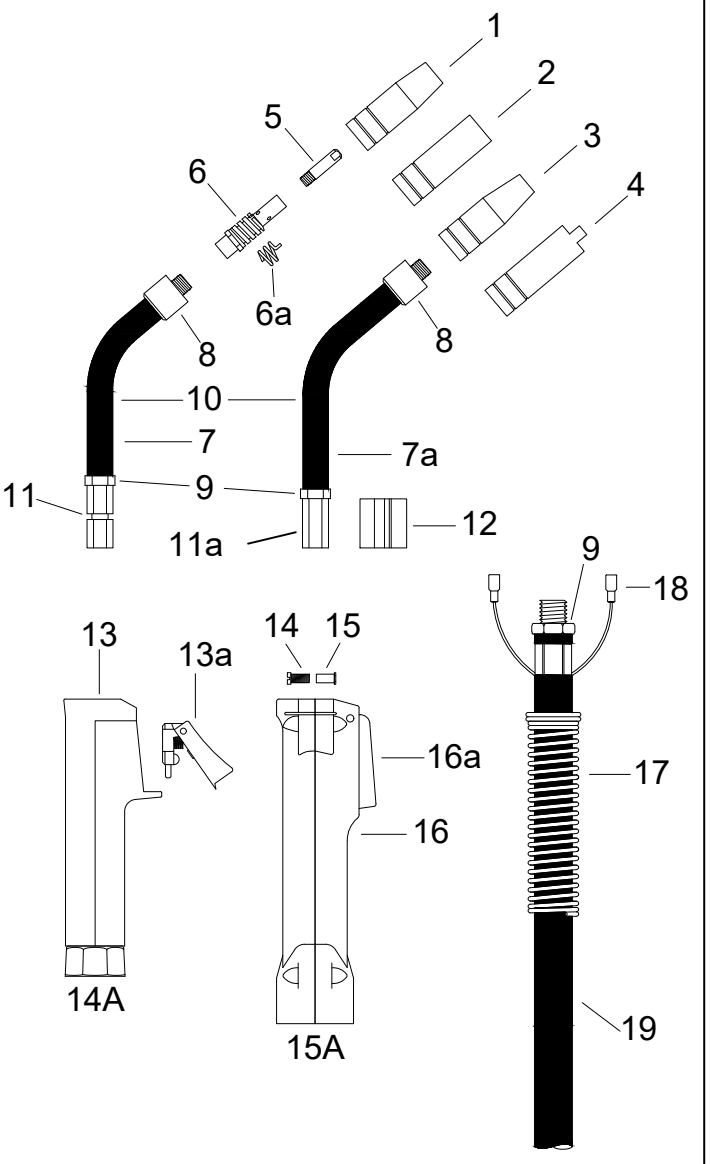

CM INDUSTRIES® INC.

COPYRIGHT © 2025 CM INDUSTRIES, INC. ALL RIGHTS RESERVED

#	Part Number	Description
19.	210-15-010 210-15-012 210-15-015	Power Cable, 10' Power Cable, 12' Power Cable, 15'
20.	260-25-002	Adaptor Support
21.	285-01-001	Adaptor Support Screw
22.	300-05-010	Male Electrical Connector
23.	401-00-001	Adaptor Nut
24.	300-05-009	Female Electrical Connector
25.	401-02-014	Connector Block, Complete
26.	285-00-002	O-Ring, Connector Block
27.	401-01-001	Liner Retaining Nut
28.	401-02-012	Connector Plug Block
29.	401-02-016	Connector Plug, Tweco/Lincoln P.M.
30.	C224	O-Ring
31.	401-01-004	Liner Retaining Plug
32.	401-02-017	Connector Plug, Miller
33.	079-974	O-Ring, Miller
34.	401-01-002	Liner Nut, Miller
35.	401-02-015	Connector Plug, Lincoln
36.	300-05-001	Electrical Plug, Miller
37.	300-05-002	Electrical Plug, Lincoln
38.	241-26-016 241-22-016	Liner #26, 15', .023"-.035" Liner #22, 15', .035"-.045"
39.	255-18-010 255-18-010 255-18-010 255-10-010 255-10-012 255-10-015	Teflon Liner Blue, 10', .023"-.035" Teflon Liner Blue, 10', .023"-.035" Teflon Liner Blue, 10', .023"-.035" Teflon Liner Red, 10', .035"-.045" Teflon Liner Red, 12', .035"-.045" Teflon Liner Red, 15', .035"-.045"
40.	259-10-001	Repl. Collet, for Red & Blue Teflon Liner

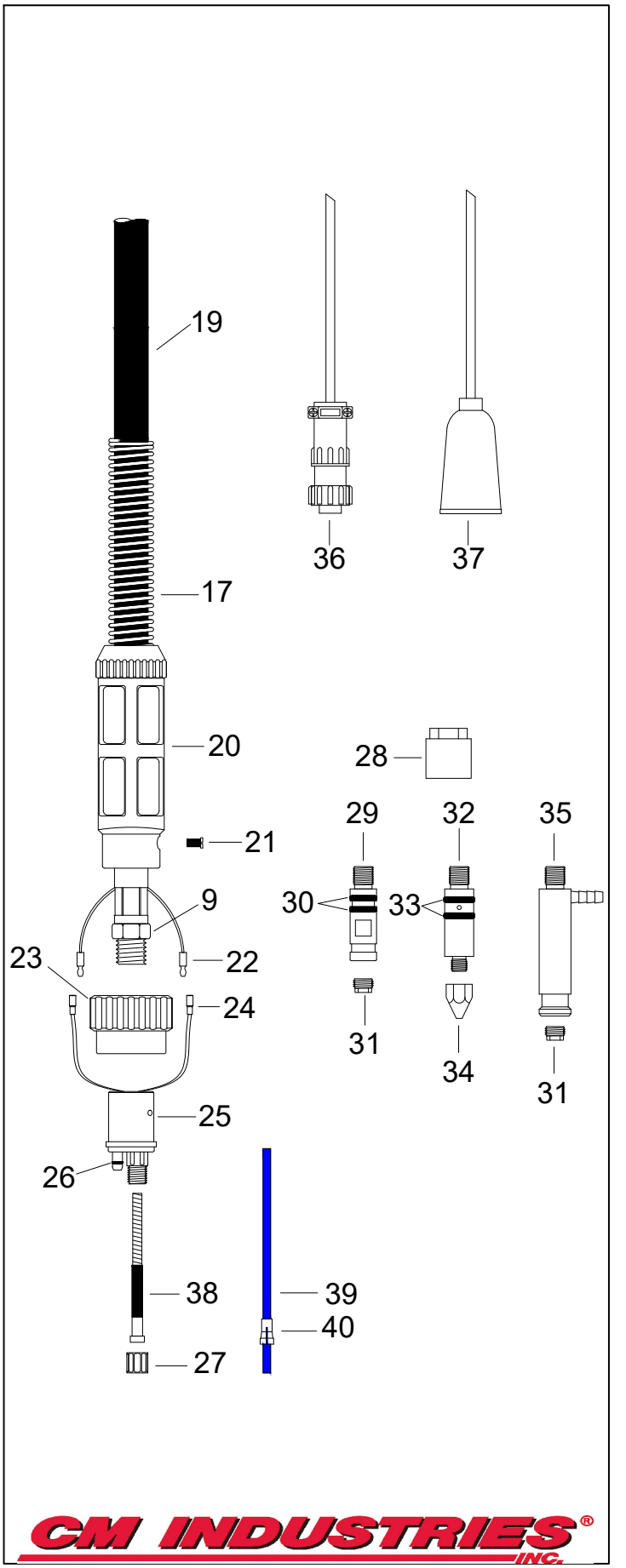

COPYRIGHT © 2025 CM INDUSTRIES, INC. ALL RIGHTS RESERVED

BNZ 24A

AIR-COOLED MIG GUN

Replacement Suitable for Binzel®

RATING	GUN ORDERING PART NUMBER	GUN PLUG Direct Connect
250 Amp CO2 @ 60% Duty Cycle **200 Amp Mixed Gas @ 60% Duty Cycle** **Wire Capacity: 0.023" (0.6mm) - 0.045" (1.2mm)**	700-24-0xx	**Euro**
	700-24-Cxx	**Century®**
	700-24-Lxx	**Lincoln® LN**
	700-24-Rxx	**Lincoln® Power MIG**
	700-24-Mxx	**Miller®**
	700-24-Txx	**Tweco® #4**
	xx = Standard lengths of 10, 12, 15, 20 and 25 ft. Custom lengths also available.	

#	Part Number	Description
1.	165-24-001	Nozzle, Conical, 1/2" I.D., **Std.**
2.	165-24-002	Nozzle, Cylindrical, 11/16" I.D.
3.	165-24-011	Nozzle, Conical Small, 3/8" I.D.
4.	150-06-102	Contact Tip, M6, .024" 0.6mm
	150-08-102	Contact Tip, M6, .030" 0.8mm
	150-09-102	Contact Tip, M6, .035" 0.9mm, **Std.**
	150-10-102	Contact Tip, M6, .040" 1.0mm
	150-12-102	Contact Tip, M6, .045" 1.2mm
5.	160-06-024	Contact Tip Holder, M6, **Std.**
	160-06-124	Contact Tip Holder, Long, M6
6.	046-24-001	Insulator/Gas Diffuser, **Std.**
7.	051-24-050	Swan Neck, 50°
8.	047-00-100	Body Insulator
9.	170-66-005	Handle Screw
10.	170-66-009	Handle Post
11.	170-66-002	Handle, Complete w/ Screws & Posts
12a.	170-66-000	Trigger Only
	185-66-003	Repl. Switch Assembly
12.	170-66-102	Handle Assembly w/ Locking Trigger (Optional)
13a.	185-66-023	Micro Switch for Locking Trigger
13.	185-36-001	Cable Support Spring
14.	290-01-010	Hex Nut
15.	300-05-004	Trigger Wire Connector, Large
16.	210-20-010	Power Cable, 10'
	210-20-012	Power Cable, 12'
	210-20-015	Power Cable, 15'

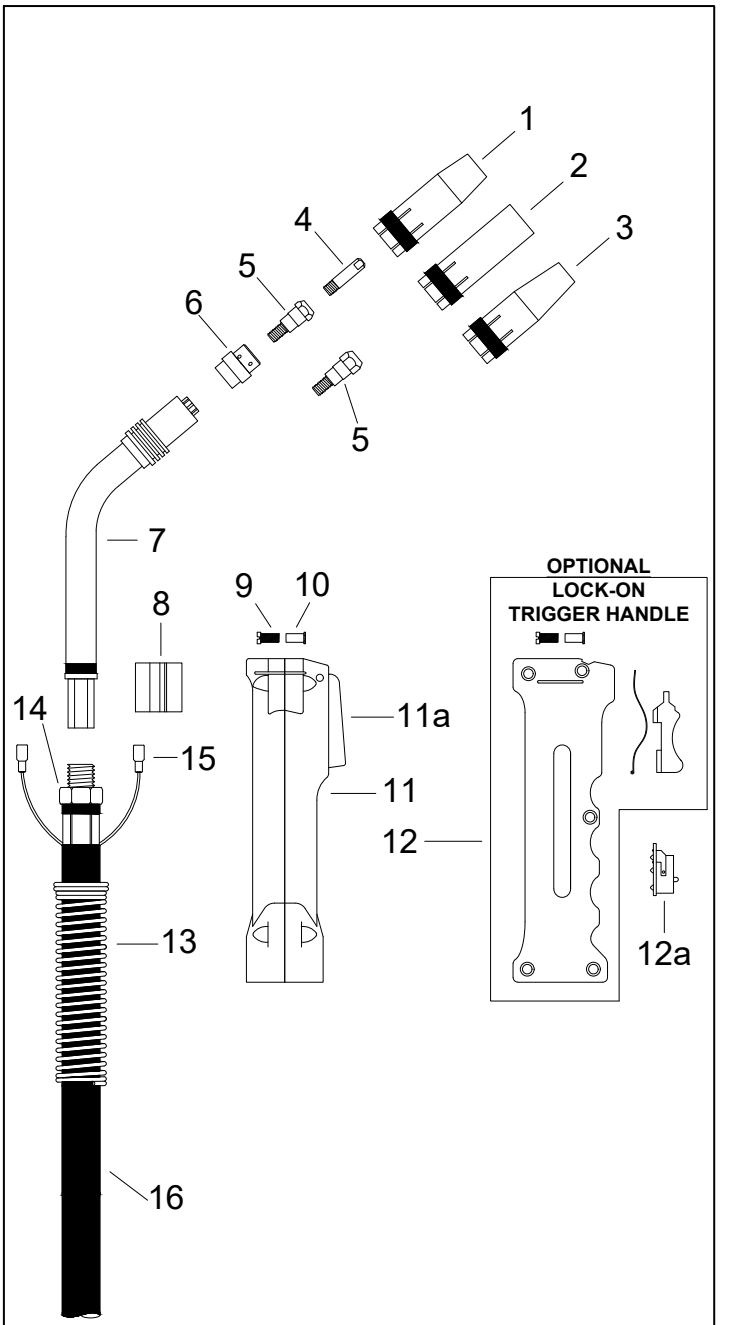

CM INDUSTRIES® INC.

COPYRIGHT © 2025 CM INDUSTRIES, INC. ALL RIGHTS RESERVED

#	Part Number	Description
17.	260-25-002	Adaptor Support
18.	285-01-001	Adaptor Support Screw
19.	300-05-010	Male Electrical Connector
20.	401-00-001	Adaptor Nut
21.	300-05-009	Female Electrical Connector
22.	401-02-014	Connector Block, Complete
23.	285-00-002	O-Ring, Connector Block
24.	401-01-001	Liner Retaining Nut
25.	401-02-012	Connector Plug Block
26.	401-02-016	Connector Plug, Hobart/Tweco/Lincoln P.M.
27.	C224	O-Ring
28.	401-01-004	Liner Retaining Plug
29.	401-02-017	Connector Plug, Miller
30.	079-974	O-Ring, Miller
31.	401-01-002	Liner Nut, Miller
32.	401-02-015	Connector Plug, Lincoln LN
33.	B8631	Gas Hose Nipple
34.	300-05-001	Electrical Plug, Miller
35.	300-05-002	Electrical Plug, Lincoln
36.	241-26-016 241-22-016	Liner #26, 15', .023"-.035" Liner #22, 15', .035"-.045"
37.	255-18-010 255-18-010 255-18-010 255-10-010 255-10-012 255-10-015	Teflon Liner Blue, 10', .023"-.035" Teflon Liner Blue, 10', .023"-.035" Teflon Liner Blue, 10', .023"-.035" Teflon Liner Red, 10', .035"-.045" Teflon Liner Red, 12', .035"-.045" Teflon Liner Red, 15', .035"-.045"
38.	259-10-001	Repl. Collet, for Blue and Red Teflon Liner

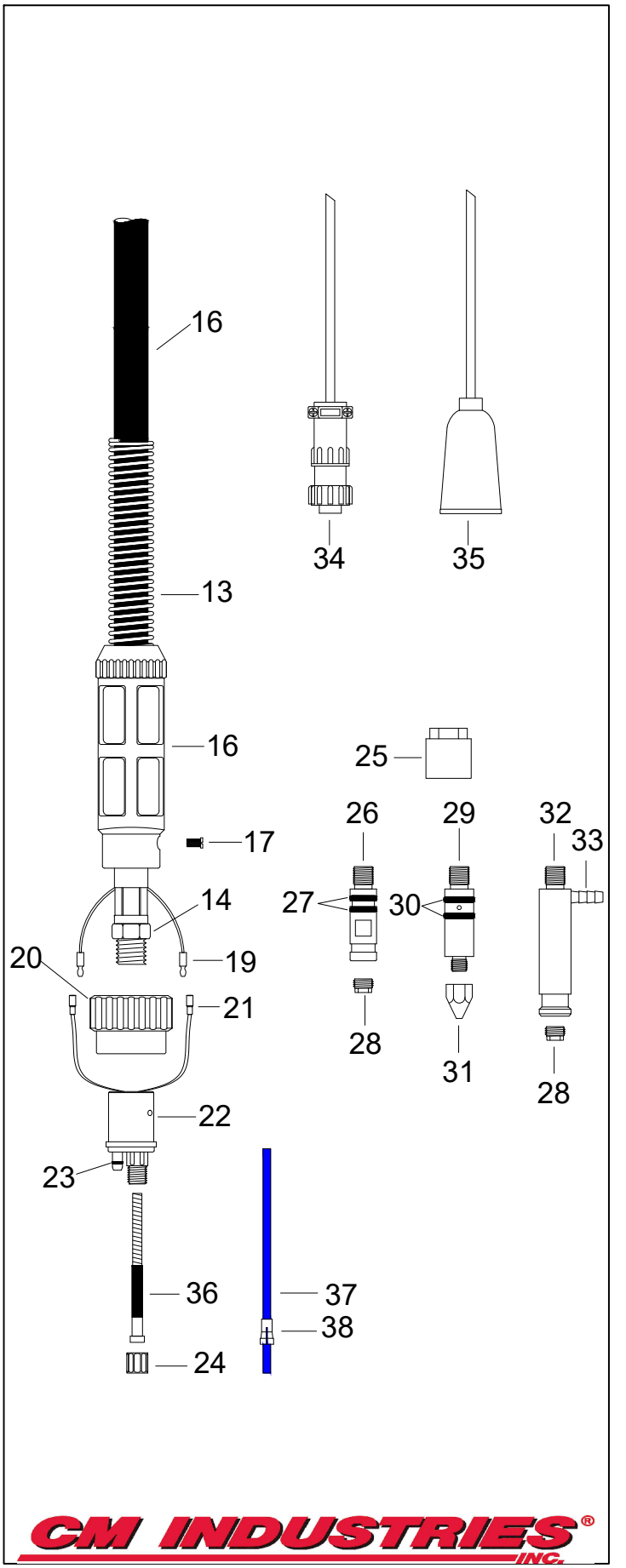

COPYRIGHT © 2025 CM INDUSTRIES, INC. ALL RIGHTS RESERVED

BNZ 25A

AIR-COOLED MIG GUN

Replacement Suitable for Binzel®

RATING	GUN ORDERING PART NUMBER	GUN PLUG Direct Connect
250 Amp CO2 @ 60% Duty Cycle **200 Amp Mixed Gas @ 60% Duty Cycle** **Wire Capacity: 0.030" (0.8mm) - 0.045" (1.2mm)**	700-25-0xx	**Euro**
	700-25-Cxx	**Century®**
	700-25-Lxx	**Lincoln® LN**
	700-25-Rxx	**Lincoln® Power MIG**
	700-25-Mxx	**Miller®**
	700-25-Txx	**Tweco® #4**
	xx = Standard lengths of 10, 12, 15, 20 and 25 ft. Custom lengths also available.	

#	Part Number	Description
1.	165-25-001	Nozzle, Conical, 9/16" I.D., **Std.**
2.	165-25-002	Nozzle, Cylindrical, 11/16" I.D.
3.	165-25-011	Nozzle, Conical Small, 7/16" I.D.
4.	150-06-120	Contact Tip, M6, .024" 0.6mm
	150-08-120	Contact Tip, M6, .030" 0.8mm
	150-09-120	Contact Tip, M6, .035" 0.9mm, **Std.**
	150-10-120	Contact Tip, M6, .040" 1.0mm
	150-12-120	Contact Tip, M6, .045" 1.2mm
5.	160-06-025	Contact Tip Holder, M6, **Std.**
6.	035-25-002	Nozzle Spring
7.	051-25-050	Swan Neck, 50°
	051-25-001	Swan Neck, Flexible
8.	047-00-100	Body Insulator
9.	170-66-005	Handle Screw
10.	170-66-009	Handle Post
11.	170-66-002	Handle, Complete w/ Screws & Posts
12a.	170-66-000	Trigger Only
	185-66-003	Repl. Switch Assembly
12.	170-66-102	Handle Assembly w/ Locking Trigger (Optional)
13a.	185-66-023	Micro Switch for Locking Trigger
13.	185-36-001	Cable Support Spring
14.	290-01-010	Hex Nut
15.	300-05-004	Trigger Wire Connector, Large
16.	210-25-010	Power Cable, 10'
	210-25-012	Power Cable, 12'
	210-25-015	Power Cable, 15'

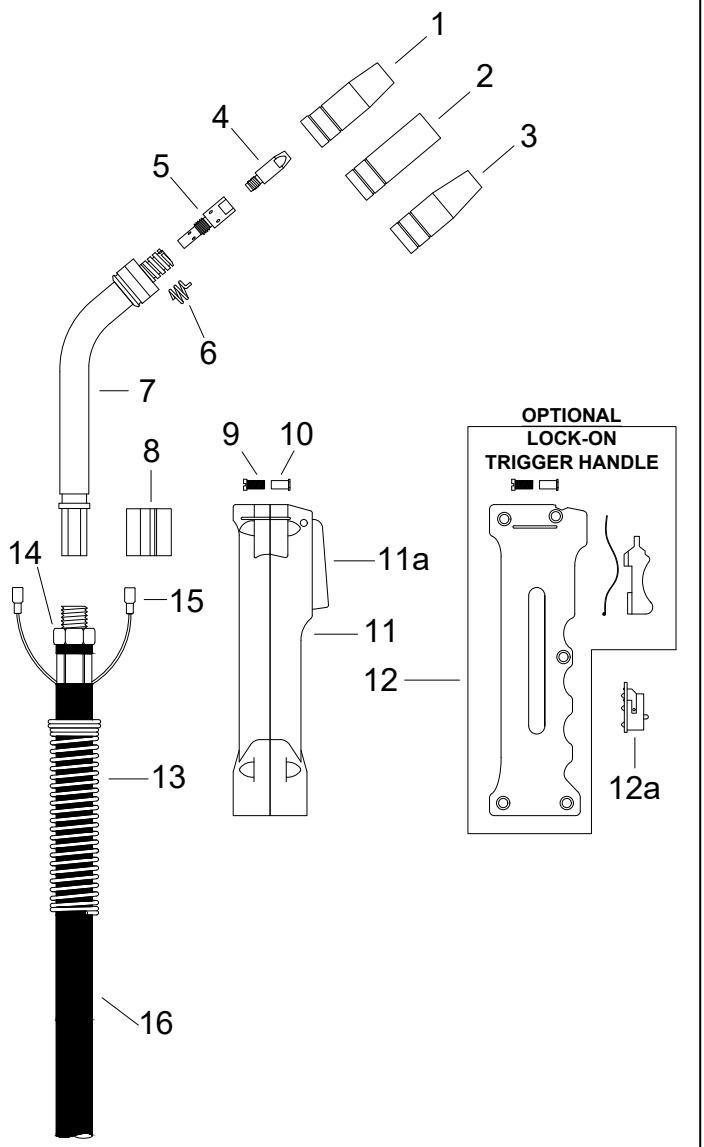

CM INDUSTRIES® INC.

COPYRIGHT © 2025 CM INDUSTRIES, INC. ALL RIGHTS RESERVED

#	Part Number	Description
17.	260-25-002	Adaptor Support
18.	285-01-001	Adaptor Support Screw
19.	300-05-010	Male Electrical Connector
20.	401-00-001	Adaptor Nut
21.	300-05-009	Female Electrical Connector
22.	401-02-014	Connector Block, Complete
23.	285-00-002	O-Ring, Connector Block
24.	401-01-001	Liner Retaining Nut
25.	401-02-012	Connector Plug Block
26.	401-02-016	Connector Plug, Hobart/Tweco/Lincoln P.M.
27.	C224	O-Ring
28.	401-01-004	Liner Retaining Plug
29.	401-02-017	Connector Plug, Miller
30.	079-974	O-Ring, Miller
31.	401-01-002	Liner Nut, Miller
32.	401-02-015	Connector Plug, Lincoln LN
33.	B8631	Gas Hose Nipple
34.	300-05-001	Electrical Plug, Miller
35.	300-05-002	Electrical Plug, Lincoln
36.	241-26-016 241-22-016	Liner #26, 15', .023"-.035" Liner #22, 15', .035"-.045", Std.
37.	255-18-010 255-18-010 255-18-010 255-10-010 255-10-012 255-10-015	Teflon Liner Blue, 10', .035" Teflon Liner Blue, 10', .035" Teflon Liner Blue, 10', .035" Teflon Liner Red, 10', .035" Teflon Liner Red, 12', .035" Teflon Liner Red, 15', .035"
38.	259-10-001	Repl. Collet, for Blue & Red Teflon Liner

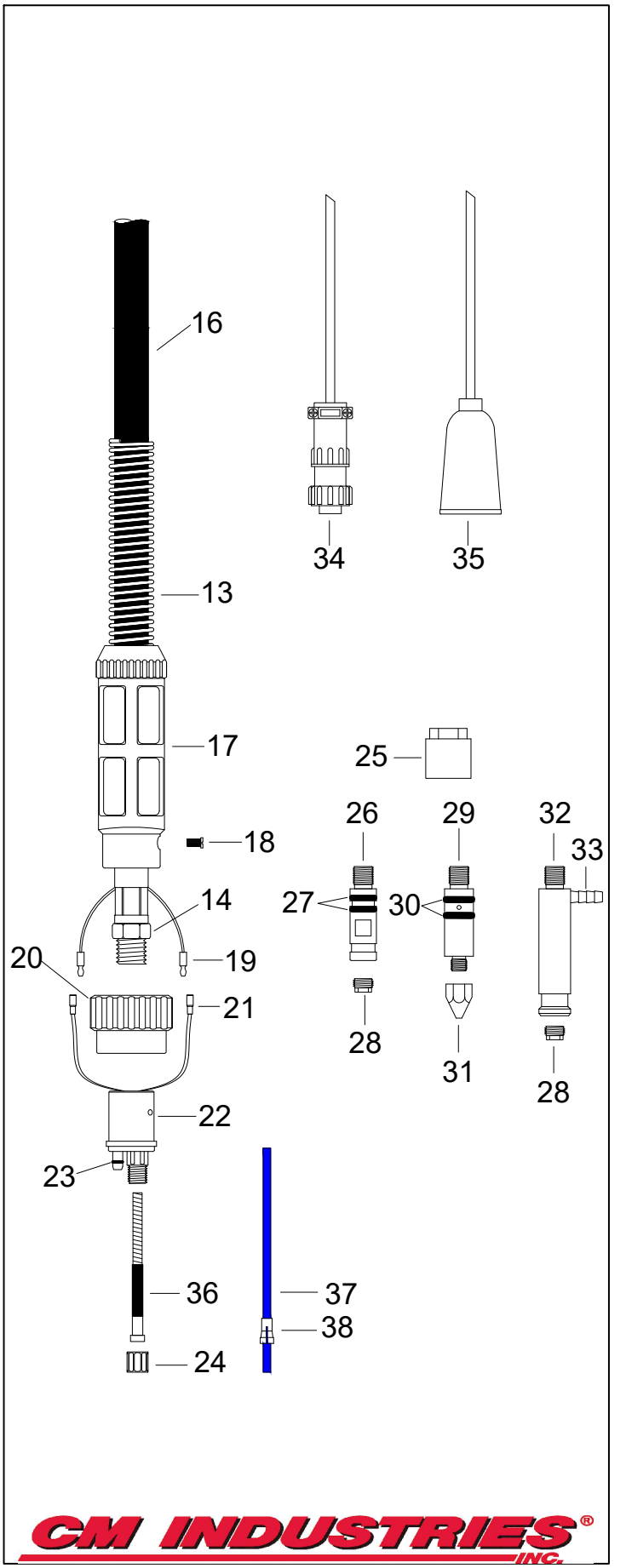

COPYRIGHT © 2025 CM INDUSTRIES, INC. ALL RIGHTS RESERVED

BNZ 26A

AIR-COOLED MIG GUN

Replacement Suitable for Binzel®

RATING	GUN ORDERING PART NUMBER	GUN PLUG Direct Connect
290 Amp CO2 @ 60% Duty Cycle **260 Amp Mixed Gas @ 60% Duty Cycle** **Wire Capacity: 0.030" (0.8mm) - 0.045" (1.2mm)**	700-26-0xx	**Euro**
	700-26-Cxx	**Century®**
	700-26-Lxx	**Lincoln® LN**
	700-26-Rxx	**Lincoln® Power MIG**
	700-26-Mxx	**Miller®**
	700-26-Txx	**Tweco® #4**
	xx = Standard lengths of 10, 12, 15, 20 and 25 ft. Custom lengths also available.	

#	Part Number	Description
1.	165-52-001	Nozzle, Conical, 5/8" I.D., **Std.**
2.	165-52-002	Nozzle, Cylindrical, 3/4" I.D.
3.	165-52-011	Nozzle, Conical Small, 9/16" I.D.
	165-52-111	Nozzle, Conical Super Small, 7/16" I.D.
4.	150-06-120	Contact Tip, M6, .024" 0.6mm
	150-08-120	Contact Tip, M6, .030" 0.8mm
	150-09-120	Contact Tip, M6, .035" 0.9mm, **Std.**
	150-10-120	Contact Tip, M6, .040" 1.0mm
	150-12-120	Contact Tip, M6, .045" 1.2mm
	150-14-120	Contact Tip, M6, .052" 1.4mm
	150-16-120	Contact Tip, M6, 1/16" 1.6mm
5.	160-06-026	Contact Tip Holder, M6, **Std.**
	160-08-026	Contact Tip Holder, M8, H.D.
6.	160-06-126	Contact Tip Holder, Long, M6
	160-08-126	Contact Tip Holder, Long, M8, H.D.
7.	046-26-001	Insulator/Gas Diffuser, **Std.**
8.	051-26-050	Swan Neck, 50°
9.	047-00-100	Body Insulator
10.	170-66-005	Handle Screw
11.	170-66-009	Handle Post
12.	170-66-002	Handle, Complete w/ Screws & Posts
12a.	170-66-000	Trigger Only
	185-66-003	Repl. Switch Assembly
13.	170-66-102	Handle Assembly w/ Locking Trigger (Optional)
13a.	185-66-023	Micro Switch for Locking Trigger
14.	185-36-001	Cable Support Spring
15.	290-01-010	Hex Nut
16.	300-05-004	Trigger Wire Connector, Large
17.	210-25-010	Power Cable, 10'
	210-25-012	Power Cable, 12'
	210-25-015	Power Cable, 15'
	210-25-020	Power Cable, 20'
	210-25-025	Power Cable, 25'

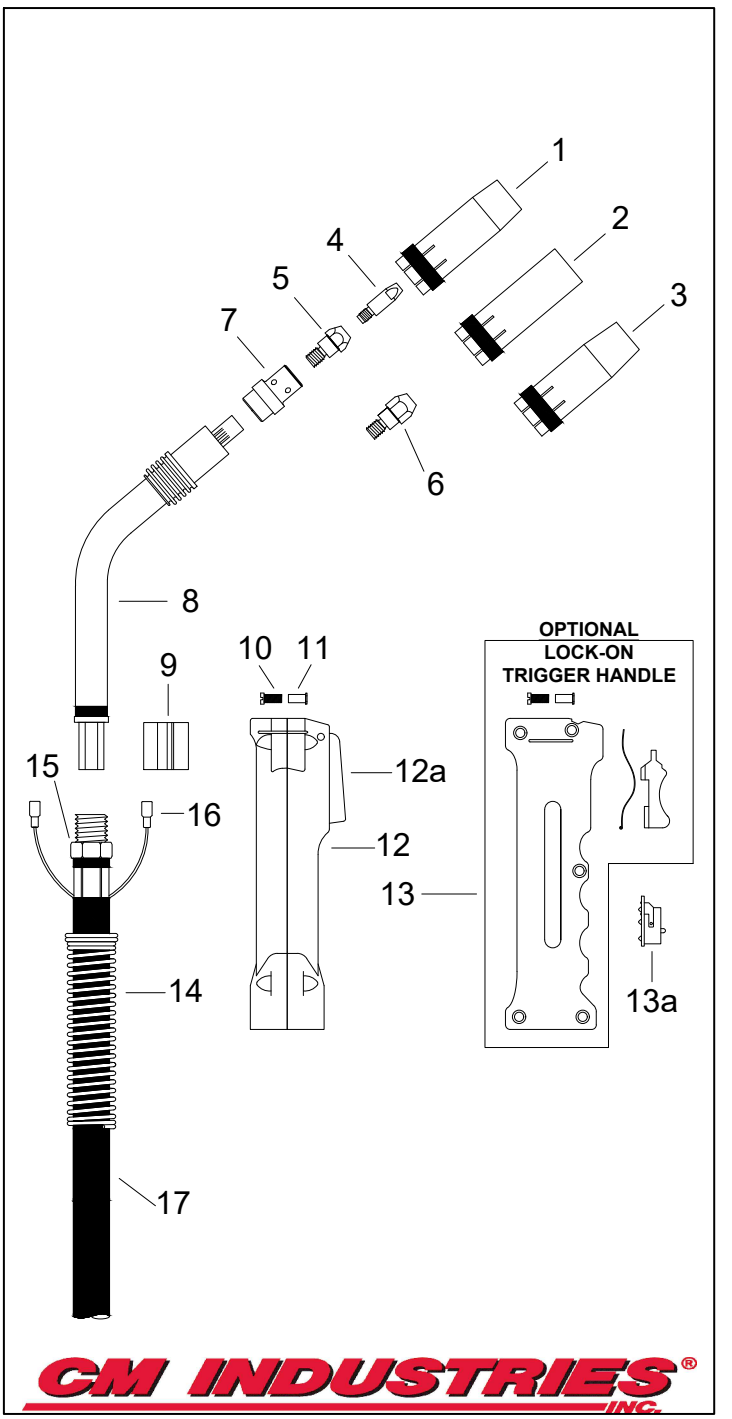

CM INDUSTRIES® INC.

COPYRIGHT © 2025 CM INDUSTRIES, INC. ALL RIGHTS RESERVED

#	Part Number	Description
18.	260-25-002	Adaptor Support
19.	285-01-001	Adaptor Support Screw
20.	300-05-010	Male Electrical Connector
21.	401-00-001	Adaptor Nut
22.	300-05-009	Female Electrical Connector
23.	401-02-014	Connector Block, Complete
24.	285-00-002	O-Ring, Connector Block
25.	401-01-001	Liner Retaining Nut
26.	401-02-012	Connector Plug Block
27.	401-02-016	Connector Plug, Tweco/Lincoln P.M.
28.	C224	O-Ring
29.	401-01-004	Liner Retaining Plug
30.	401-02-017	Connector Plug, Miller
31.	079-974	O-Ring, Miller
32.	401-01-002	Liner Nut, Miller
33.	401-02-015	Connector Plug, Lincoln LN
34.	B8631	Gas Hose Nipple
35.	300-05-001	Electrical Plug, Miller
36.	300-05-002	Electrical Plug, Lincoln
37.	241-26-016	Liner #26, 15', .023"-.035"
	241-22-016	Liner #22, 15', .035"-.045", **Std.**
	241-23-016	Liner #23, 15', .052"-1/16"
38.	255-18-010	Teflon Liner Blue, 10', .023"-.035"
	255-18-012	Teflon Liner Blue, 12', .023"-.035"
	255-18-015	Teflon Liner Blue, 15', .023"-.035"
	255-10-010	Teflon Liner Red, 10', .035"-.045"
	255-10-012	Teflon Liner Red, 12', .035"-.045"
	255-10-015	Teflon Liner Red, 15', .035"-.045"
	255-05-010	Teflon Liner Yellow, 10', .052"-1/16"
	255-05-012	Teflon Liner Yellow, 12', .052"-1/16"
	255-05-015	Teflon Liner Yellow, 15', .052"-1/16"
39.	259-10-001	Repl. Collet, for Blue & Red Teflon Liner
	259-05-001	Repl. Collet, for Yellow Teflon Liner
40.	285-00-003	Repl. O-Ring

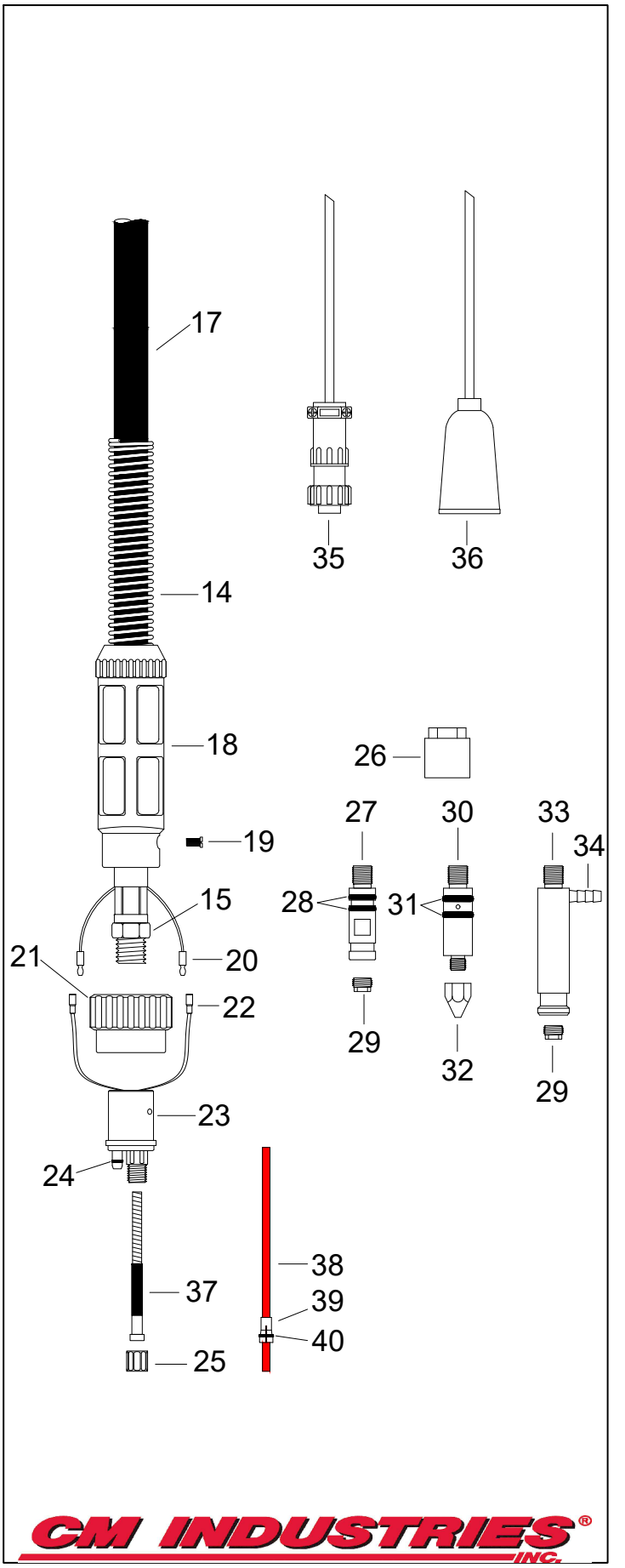

COPYRIGHT © 2025 CM INDUSTRIES, INC. ALL RIGHTS RESERVED

BNZ 36A

AIR-COOLED MIG GUN

Replacement Suitable for Binzel®

RATING	GUN ORDERING PART NUMBER	GUN PLUG Direct Connect
360 Amp CO2 @ 60% Duty Cycle **320 Amp Mixed Gas @ 60% Duty Cycle** **Wire Capacity: 0.030" (0.8mm) - 0.062" (1.6mm)**	700-36-0xx	**Euro**
	700-36-Cxx	**Century®**
	700-36-Lxx	**Lincoln® LN**
	700-36-LFxx	**Lincoln® LF & Power Feed**
	700-36-Rxx	**Lincoln® Power MIG**
	700-36-Mxx	**Miller®**
	700-36-Txx	**Tweco® #4**
	xx = Standard lengths of 10, 12, 15, 20 and 25 ft. Custom lengths also available.	

#	Part Number	Description
1.	165-36-001	Nozzle, Conical, 5/8" I.D., **Std.**
2.	165-36-002	Nozzle, Cylindrical, 3/4" I.D.
3.	165-36-011	Nozzle, Conical Small, 9/16" I.D.
4.	150-06-120	Contact Tip, M6, .024" 0.6mm
	150-08-120	Contact Tip, M6, .030" 0.8mm
	150-09-120	Contact Tip, M6, .035" 0.9mm, **Std.**
	150-10-120	Contact Tip, M6, .040" 1.0mm
	150-12-120	Contact Tip, M6, .045" 1.2mm
	150-14-120	Contact Tip, M6, .052" 1.4mm
	150-16-120	Contact Tip, M6, 1/16" 1.6mm
5.	160-06-036	Contact Tip Holder, M6, **Std.**
	160-06-136	Contact Tip Holder, Long, M6
6.	160-08-036	Contact Tip Holder, M8, H.D.
	160-08-136	Contact Tip Holder, Long, M8, H.D.
7.	046-36-001	Insulator/Gas Diffuser, White, **Std.**
	046-36-002	Insulator/Gas Diffuser, Heat Resistant Black
8.	051-36-050	Swan Neck, 50°
9.	047-00-100	Body Insulator
10.	170-66-005	Handle Screw
11.	170-66-009	Handle Post
12.	170-66-002	Handle, Complete w/ Screws & Posts
12a.	170-66-000	Trigger Only
	185-66-003	Repl. Switch Assembly
13.	170-66-102	Handle Assembly w/ Locking Trigger (Optional)
13a.	185-66-023	Micro Switch for Locking Trigger
14.	185-40-001	Cable Support Spring
15.	290-01-010	Hex Nut
16.	300-05-004	Trigger Wire Connector, Large
17.	210-36-010	Power Cable, 10'
	210-36-012	Power Cable, 12'
	210-36-015	Power Cable, 15'
	210-36-020	Power Cable, 20'
	210-36-025	Power Cable, 25'

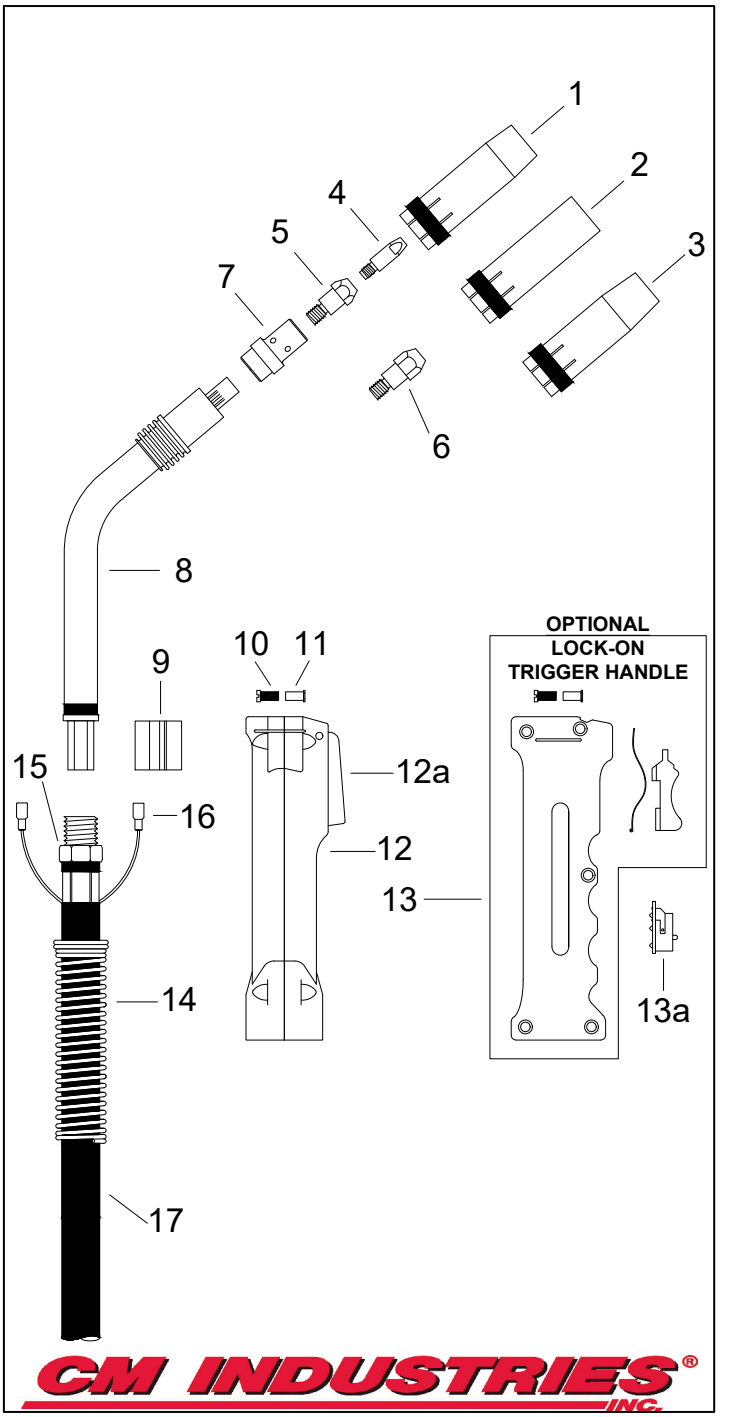

CM INDUSTRIES® INC.

COPYRIGHT © 2025 CM INDUSTRIES, INC. ALL RIGHTS RESERVED

#	Part Number	Description
18.	260-25-002	Adaptor Support
19.	285-01-001	Adaptor Support Screw
20.	300-05-010	Male Electrical Connector
21.	401-00-001	Adaptor Nut
22.	300-05-009	Female Electrical Connector
23.	401-02-014	Connector Block, Complete
24.	285-00-002	O-Ring, Connector Block
25.	401-01-001	Liner Retaining Nut
26.	401-02-012	Connector Plug Block
27.	401-02-016	Connector Plug, Hobart/Tweco/Lincoln P.M.
28.	C224	O-Ring
29.	401-01-004	Liner Retaining Plug
30.	401-02-017	Connector Plug, Miller
31.	079-974	O-Ring, Miller
32.	401-01-002	Liner Nut, Miller
33.	401-02-015	Connector Plug, Lincoln LN
34.	B8631	Gas Hose Nipple
35.	300-05-001	Electrical Plug, Miller
36.	300-05-002	Electrical Plug, Lincoln
37.	241-26-016	Liner #26, 15', .023"-.035"
	241-22-016	Liner #22, 15', .035"-.045", **Std.**
	241-23-016	Liner #23, 15', .052"-1/16"
38.	255-18-010	Teflon Liner Blue, 10', .023"-.035"
	255-18-012	Teflon Liner Blue, 12', .023"-.035"
	255-18-015	Teflon Liner Blue, 15', .023"-.035"
	255-10-010	Teflon Liner Red, 10', .035"-.045"
	255-10-012	Teflon Liner Red, 12', .035"-.045"
	255-10-015	Teflon Liner Red, 15', .035"-.045"
	255-05-010	Teflon Liner Yellow, 10', .052"-1/16"
	255-05-012	Teflon Liner Yellow, 12', .052"-1/16"
	255-05-015	Teflon Liner Yellow, 15', .052"-1/16"
39.	259-10-001	Repl. Collet, for Blue & Red Teflon Liner
	259-05-001	Repl. Collet, for Yellow Teflon Liner
40.	285-00-003	Repl. O-Ring

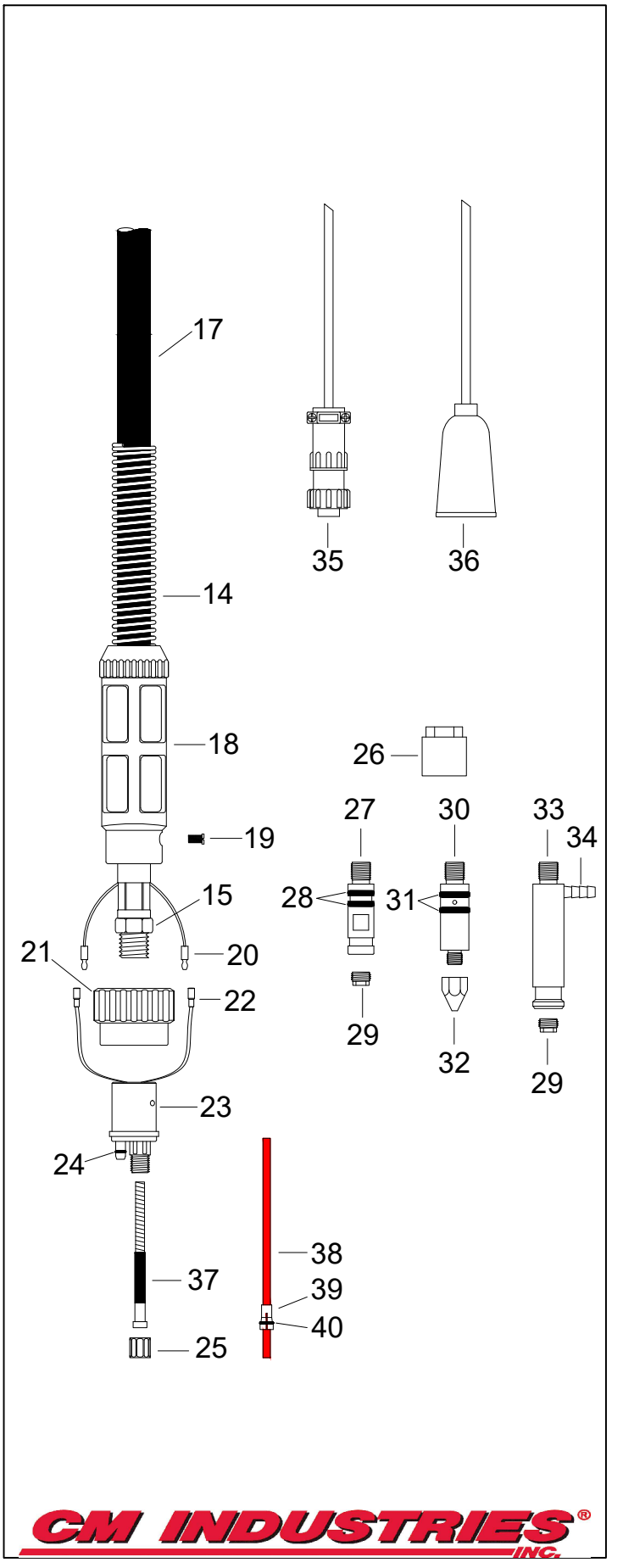

COPYRIGHT © 2025 CM INDUSTRIES, INC. ALL RIGHTS RESERVED

BNZ 501W

WATER-COOLED MIG GUN

Replacement Suitable for Binzel®

Ordering Information

Gun Model & Amperage
BZ5 500 Amp Water-Cooled

BZ5 15 - 5 62 - M Z B _

Length
10 10 ft. (3.05m)
12 12 ft. (3.66m)
15 15 ft. (4.57m)
20 20 ft. (6.10m)
25 25 ft. (7.63m)

Neck
1 180°
5 50°
6 60°

Wire Size
35 .035″ 0.9mm
45 .045″ 1.2mm
52 .052″ 1.4mm
62 1/16″ 1.6mm
78 5/64″ 2.0mm
93 3/32″ 2.4mm

Power Pin
E Euro
L Lincoln® LN
N Lincoln® LF & Power Feed
M Miller®
T Tweco® 4 (Standard Lead)
V Lincoln® Power MIG

Handle Options
L Locking Handle
P Pistol Grip Handle
R ERGO Handle
T EZ Grip Handle w/ Trig Ext.
Z EZ Grip Handle

Options
B Bottom Trigger
T Top Trigger

Custom Options
2 +2″ Longer Neck
3 +3″ Longer Neck
4 +4″ Longer Neck
S Short Neck

#	Part Number	Description
1.	165-52-001	Nozzle, Conical, 5/8" I.D., **Std.**
	165-52-305	Nozzle, Conical Heavy Duty, 5/8" I.D.
2.	165-52-002	Nozzle, Cylindrical, 3/4" I.D.
3.	165-52-011	Nozzle, Conical Small, 9/16" I.D.
	165-52-111	Nozzle, Conical Super Small, 7/16" I.D.
4.	150-08-130	Contact Tip, M8, .030" 0.8mm
	150-09-130	Contact Tip, M8, .035" 0.9mm
	150-10-130	Contact Tip, M8, .040" 1.0mm
	150-12-130	Contact Tip, M8, .045" 1.2mm
	150-12-130A	Contact Tip, M8, .047" AL 1.3mm
	150-14-130	Contact Tip, M8, .052" 1.4mm
	150-16-130	Contact Tip, M8, 1/16" 1.6mm
	150-20-130	Contact Tip, M8, 5/64" 2.0mm
	150-24-130	Contact Tip, M8, 3/32" 2.4mm
5.	046-52-002	Insulator/Gas Diffuser, **Std.**
	046-52-003	Insulator/Gas Diffuser, High Temp.
6.	160-08-402	Contact Tip Holder, M8, **Std.**
	160-06-402	Contact Tip Holder, M6
7.	160-08-404	Contact Tip Holder, Long, M8, Flush
	160-06-404	Contact Tip Holder, Long, M6, Flush
8.	064-52-002	Insulating Washer
9.	051-52-250	Swan Neck, 50° (Includes items 6 & 8)
	051-52-260	Swan Neck, 60°
	051-53-250	Swan Neck +2", 50°
	051-53-260	Swan Neck +2", 60°
	051-54-250	Swan Neck +3", 50°
	051-54-260	Swan Neck +3", 60°
	051-55-250	Swan Neck +4", 50°
	051-55-260	Swan Neck +4", 60°
	051-50-250	Swan Neck, Short, 60°
	051-52-380	Swan Neck, 180°
10.	170-66-005	Handle Screw
11.	170-66-009	Handle Post
12.	170-66-002	EZ Grip Handle, Complete w/ Screws
12a.	170-66-032	Handle, Complete w/ Trigger Extension
	170-63-006	Trigger Extension Only
13.	170-66-102	Handle Assembly w/ Locking Trigger
13a.	185-66-023	Micro Switch for Locking Trigger
14.	170-66-104	Ergo Handle
14a.	170-14-100	Trigger Switch
15.	170-66-404	Pistol Grip Handle
15a.	170-14-002	Trigger Switch

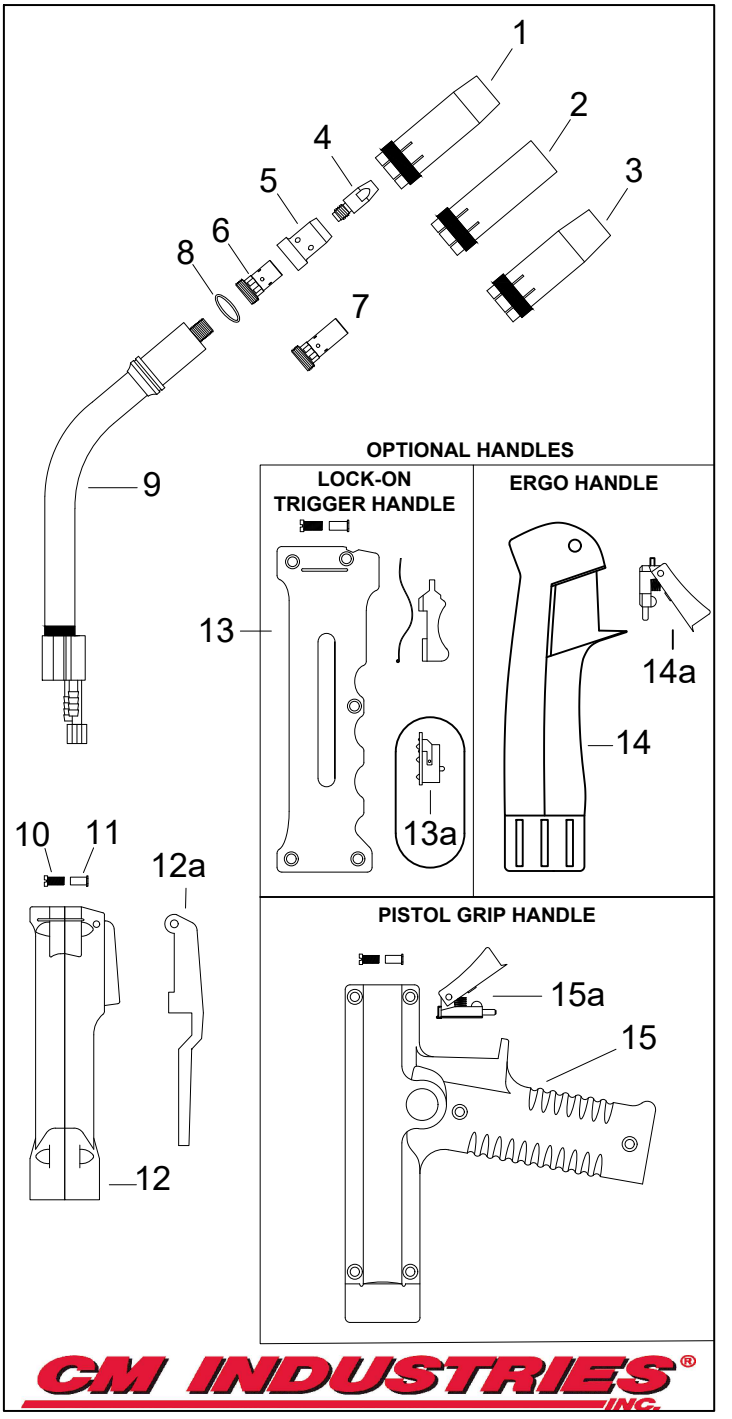

CM INDUSTRIES® INC.

COPYRIGHT © 2025 CM INDUSTRIES, INC. ALL RIGHTS RESERVED

#	Part Number	Description
	Items 20-26 are available in lengths 10, 12, 15, 20, and 25 feet	
16.	300-05-004	Trigger Wire Connector
17.	350-61-095	Hose Clamp w/Bridge, 9.5mm
18.	350-60-087	Hose Clamp, 8.7mm
19.	260-52-001	Cable Support
20.	310-55-0xx	Gas Hose
21.	235-52-0xx	Wire Conduit
22.	225-52-0xx	Power Cable
23.	310-52-0xx	Water Hose, IN, Blue
24.	300-05-0xx	Trigger Wire
25.	216-52-0xx	Outer Cable Cover
26.	215-52-0xx	Cable Assembly (Includes Items 20-25)
27.	185-52-001	Cable Support Spring
28.	260-52-202	Adaptor Support
29.	285-01-001	Adaptor Support Screw
30.	310-53-002	Water Hose, OUT, Red, 2'
31.	300-05-010	Male Electrical Connector
32.	401-00-001	Adaptor Nut
33.	300-05-009	Female Electrical Connector
34.	401-02-052	Adaptor Block, Euro
35.	285-00-002	O-Ring, Adaptor Block
36.	350-52-001	Male Water Fitting
37.	350-60-095	Hose Clamp, 9.5mm
38.	300-05-001	Electrical Plug, Miller
39.	300-05-002	Electrical Plug, Lincoln LF, LN, & Power Feed
40.	401-02-054	Connector Plug, Miller
41.	079-974	O-Ring, Miller
42.	401-01-002	Liner Nut, Miller
43.	401-02-057	Connector Plug, Tweco/Linc. LF & Power Feed
44.	C224	O-Ring, Tweco
45.	401-01-004	Liner Retaining Plug
46.	401-02-056	Connector Plug, Lincoln LN
47.	B8631	Gas Hose Nipple
48.	401-01-001	Liner Retaining Nut
49.	241-02-016	Liner, 15' .035"-.045"
	241-03-016	Liner, 15' .052"-1/16"
	241-04-016	Liner, 15' 5/64"-3/32"
	241-02-027	Liner, 25' .035"-.045"
	241-03-027	Liner, 25' .052"-1/16"
	241-04-027	Liner, 25' 5/64"-3/32"
50.	255-10-010	Teflon Liner Red, 10' .035"-.045"
	255-10-012	Teflon Liner Red, 12' .035"-.045"
	255-10-015	Teflon Liner Red, 15' .035"-.045"
	255-05-010	Teflon Liner Yellow, 10' .045"-1/16"
	255-05-012	Teflon Liner Yellow, 12' .045"-1/16"
	255-05-015	Teflon Liner Yellow, 15' .045"-1/16"
51.	259-05-001	Repl. Collet, Teflon Liner Yellow
	259-10-001	Repl. Collet, Teflon Liner Red & Blue
	Additional Items	
52.	350-65-002	Female Quick Disconnect
53.	350-65-005	Female Quick Disconnect w/ Panel Mount

Not Pictured:
See page 155 for Water Hose Extension Kits

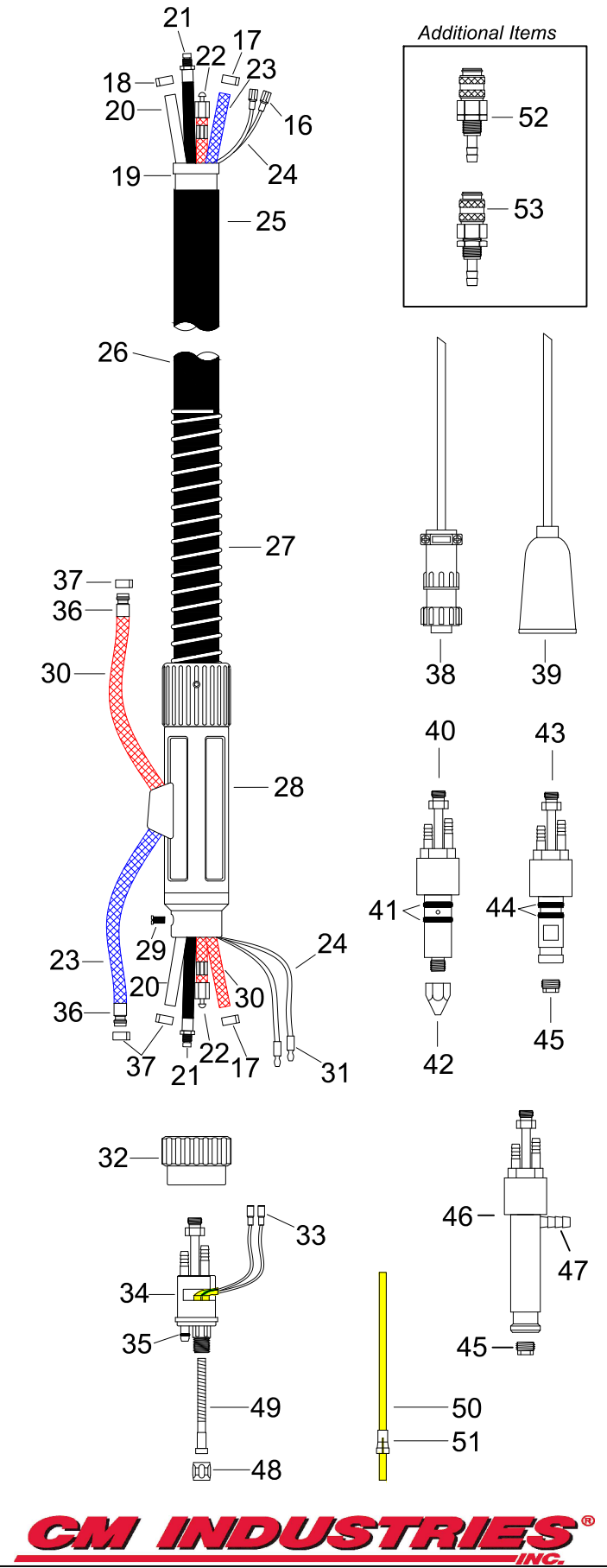

COPYRIGHT © 2025 CM INDUSTRIES, INC. ALL RIGHTS RESERVED

PPA26 PUSH-PULL AIR-COOLED MIG GUN

Replacement Suitable for Binzel

RATING	GUN ORDERING PART NUMBER			GUN PLUG Direct Connect
260 Amp CO2 @ 60% Duty Cycle **200 Amp Mixed Gas @ 60% Duty Cycle** **Wire Capacity: 0.023" (0.6mm) - 0.062" (1.6mm)**	750-26-010	w/ 180° Neck	10'	**Euro**
	750-26-015	w/ 180° Neck	15'	**Euro**
	750-26-025	w/ 180° Neck	25'	**Euro**
	750-26-110	w/ 45° Neck	10'	**Euro**
	750-26-115	w/ 45° Neck	15'	**Euro**
	750-26-125	w/ 45° Neck	25'	**Euro**

#	Part Number	Description
1.	165-52-001	Nozzle, Conical, 5/8" I.D., **Std.**
2.	165-52-002	Nozzle, Cylindrical, 3/4" I.D.
3.	165-52-011	Nozzle, Conical Small, 9/16" I.D.
4.	165-52-111	Nozzle, Conical Super Small, 7/16" I.D.
5.	150-06-120	Contact Tip, M6, .024" 0.6mm
	150-08-120	Contact Tip, M6, .030" 0.8mm
	150-09-120	Contact Tip, M6, .035" 0.9mm, **Std.**
	150-10-120	Contact Tip, M6, .040" 1.0mm
	150-12-120	Contact Tip, M6, .045" 1.2mm
	150-14-120	Contact Tip, M6, .052" 1.4mm
	150-16-120	Contact Tip, M6, 1/16" 1.6mm
6.	046-26-001	Insulator/Gas Diffuser, **Std.**
7.	160-06-026	Contact Tip Holder, M6, **Std.**
8.	160-06-126	Contact Tip Holder, Long, M6
9.	600-26-180	Swan Neck, 180°
10.	600-26-045	Swan Neck, 45°
11.	600-01-015	Wire Guide, 180° Swan Neck
12.	600-02-019	Wire Guide, 45° Swan Neck
13.	600-02-020	Teflon Liner, 45° Swan Neck
14.	600-60-002	Handle Complete (Includes items 14-17)
15.	600-03-002	Handle Screw, Top
16.	600-04-002	Handle Screw, Bottom
17.	600-04-022	Handle Nut, bottom
18.	170-14-002	Trigger Switch
19.	600-25-100	Gear Motor, 42V DC
20.	600-03-004	Gear Motor Screw
21.	600-08-035	Wire Drive Roll, .030" 0.8mm
	600-09-035	Wire Drive Roll, .035" 0.9mm
	600-10-035	Wire Drive Roll, .040" 1.0mm
	600-12-035	Wire Drive Roll, 3/64" 1.2mm/1.3mm
	600-14-035	Wire Drive Roll, .052" 1.4mm
	600-16-035	Wire Drive Roll, 1/16" 1.6mm
22.	600-20-035	Drive Roll Seat
23.	600-11-023	Washer for Drive Roll
24.	600-03-023	Screw, Drive Roll

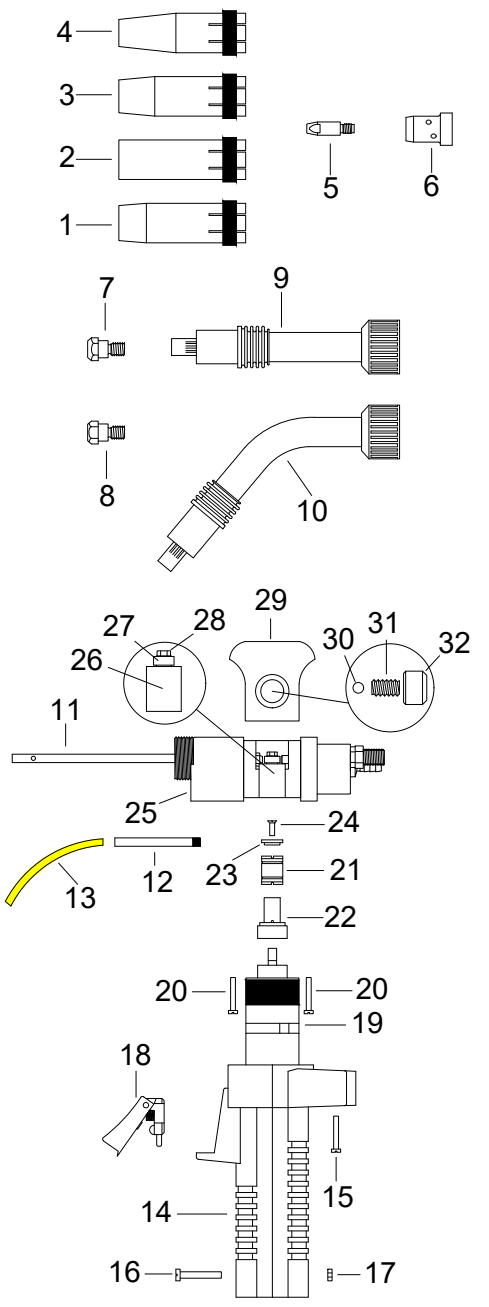

CM INDUSTRIES INC.

COPYRIGHT © 2025 CM INDUSTRIES, INC. ALL RIGHTS RESERVED

#	Part Number	Description
25.	600-26-122	Torch Body
26.	600-03-008	Idler Arm
27.	600-03-010	Idler Roll
28.	600-03-022	Hex Nut, Idler Arm
29.	600-03-009	Drive Roll Cap, w/ Hardware
30.	600-25-022	Ball, Drive Roll Cap
31.	600-25-023	Spring, Drive Roll Cap
32.	600-25-024	Knob, Drive Roll Cap
33.	300-05-009	Female Electrical Connector
34.	300-05-0xx	Trigger Wire, 10', 15, 25'
35.	310-55-0xx	Gas Hose, 10', 15', 25'
36.	350-60-095	Hose Clamp, 9.5mm
37.	600-20-009	Hex Adaptor
38.	600-30-0xx	Power Cable, 10', 15', 25'
39.	600-20-005	Cable Support Screw
40.	600-20-006	Cable Support, Push-Pull
41.	260-52-001	Cable Support
42.	216-52-0xx	Outer Cable Cover,10', 15', 25'
43.	185-52-001	Cable Support Spring
44.	260-52-003	Adaptor Support
45.	285-01-001	Adaptor Support Screw
46.	300-05-010	Male Electrical Connector
47.	401-00-001	Adaptor Nut
48.	300-05-009	Female Electrical Connector
49.	401-02-114	Adaptor Block, PPA26
50.	285-03-002	Male Pin w/ Lead
51.	285-00-002	O-ring, Adaptor Block
52.	401-01-001	Liner Retaining Nut
53.	255-18-010	Teflon Liner Blue, 10' .023"-.035"
	255-18-015	Teflon Liner Blue, 15' .023"-.035"
	255-18-025	Teflon Liner Blue, 25' .023"-.035"
	255-10-010	Teflon Liner Red, 10' .035"-.045"
	255-10-015	Teflon Liner Red, 15' .035"-.045"
	255-10-025	Teflon Liner Red, 25' .035"-.045"
	255-05-010	Teflon Liner Yellow, 10' .045"-1/16"
	255-05-015	Teflon Liner Yellow, 15' .045"-1/16"
	255-05-025	Teflon Liner Yellow, 25' .045"-1/16"
54.	259-10-001	Repl. Collet, for Red & Blue Teflon Liner
	259-05-001	Repl. Collet, for Yellow Teflon Liner

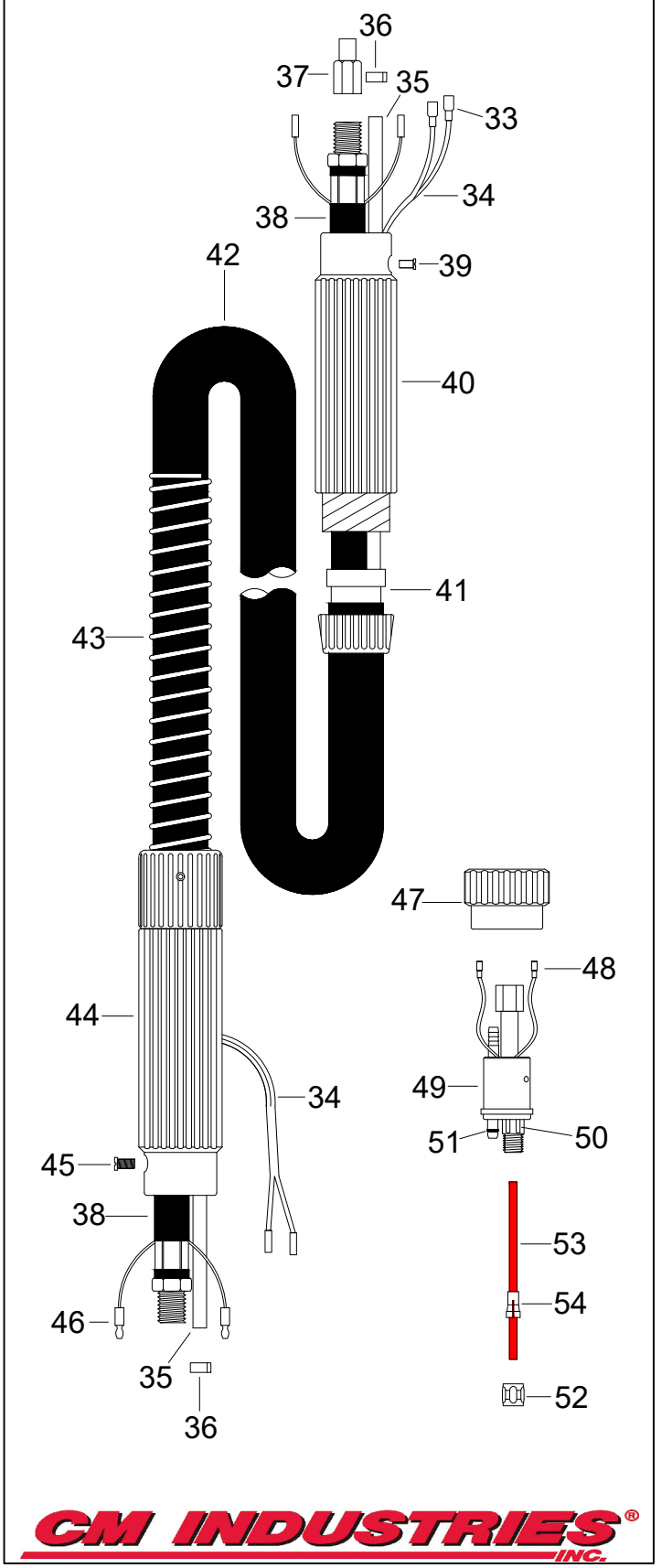

COPYRIGHT © 2025 CM INDUSTRIES, INC. ALL RIGHTS RESERVED

PPW401 PUSH-PULL WATER-COOLED MIG GUN

Replacement Suitable for Binzel

RATING	GUN ORDERING PART NUMBER			GUN PLUG Direct Connect
360 Amp CO2 @ 60% Duty Cycle	750-42-010	w/ 180° Neck	10'	**Euro**
	750-42-015	w/ 180° Neck	15'	**Euro**
300 Amp Mixed Gas @ 60% Duty Cycle	750-42-025	w/ 180° Neck	25'	**Euro**
	750-42-110	w/ 45° Neck	10'	**Euro**
Wire Capacity: 0.023" (0.6mm) - 0.062" (1.6mm)	750-42-115	w/ 45° Neck	15'	**Euro**
	750-42-125	w/ 45° Neck	25'	**Euro**

#	Part Number	Description
1.	165-52-001	Nozzle, Conical, 5/8" I.D., **Std.**
2.	165-52-002	Nozzle, Cylindrical, 3/4" I.D.
3.	165-52-011	Nozzle, Conical Small, 9/16" I.D.
4.	165-52-111	Nozzle, Conical Super Small, 7/16" I.D.
5.	150-06-130	Contact Tip, M8, .024" 0.6mm
	150-08-130	Contact Tip, M8, .030" 0.8mm
	150-09-130	Contact Tip, M8, .035" 0.9mm
	150-10-130	Contact Tip, M8, .040" 1.0mm
	150-12-130	Contact Tip, M8, .045" 1.2mm, **Std.**
	150-14-130	Contact Tip, M8, .052" 1.4mm
	150-16-130	Contact Tip, M8, 1/16" 1.6mm
6.	046-52-002	Insulator/Gas Diffuser, **Std.**
	046-52-003	Insulator/Gas Diffuser, High Temp.
7.	160-08-402	Contact Tip Holder, M8, **Std.**
	160-06-402	Contact Tip Holder, M6
8.	160-08-404	Contact Tip Holder, Long, M8, Flush
	160-06-404	Contact Tip Holder, Long, M6, Flush
9.	064-52-002	Insulating Washer
10.	600-42-180	Swan Neck, 180° (Includes items 6 & 8)
11.	600-42-045	Swan Neck, 45° (Includes items 6 & 8)
12.	600-01-015	Wire Guide, 180° Swan Neck
13.	600-02-019	Wire Guide, 45° Swan Neck
14.	600-02-020	Teflon Liner, 45° Swan Neck
15.	600-60-002	Handle Complete (Includes items 16-18)
16.	600-03-002	Handle Screw, Top
17.	600-04-002	Handle Screw, Bottom
18.	600-04-022	Handle Nut, Bottom
19.	170-14-002	Trigger Switch
20.	600-25-100	Gear Motor, 42V DC
21.	600-03-004	Gear Motor Screw
22.	600-08-035	Wire Drive Roll, .030" 0.8mm
	600-09-035	Wire Drive Roll, .035" 0.9mm
	600-10-035	Wire Drive Roll, .040" 1.0mm
	600-12-035	Wire Drive Roll, 3/64" 1.2mm/1.3mm
	600-14-035	Wire Drive Roll, .052" 1.4mm
	600-16-035	Wire Drive Roll, 1/16" 1.6mm

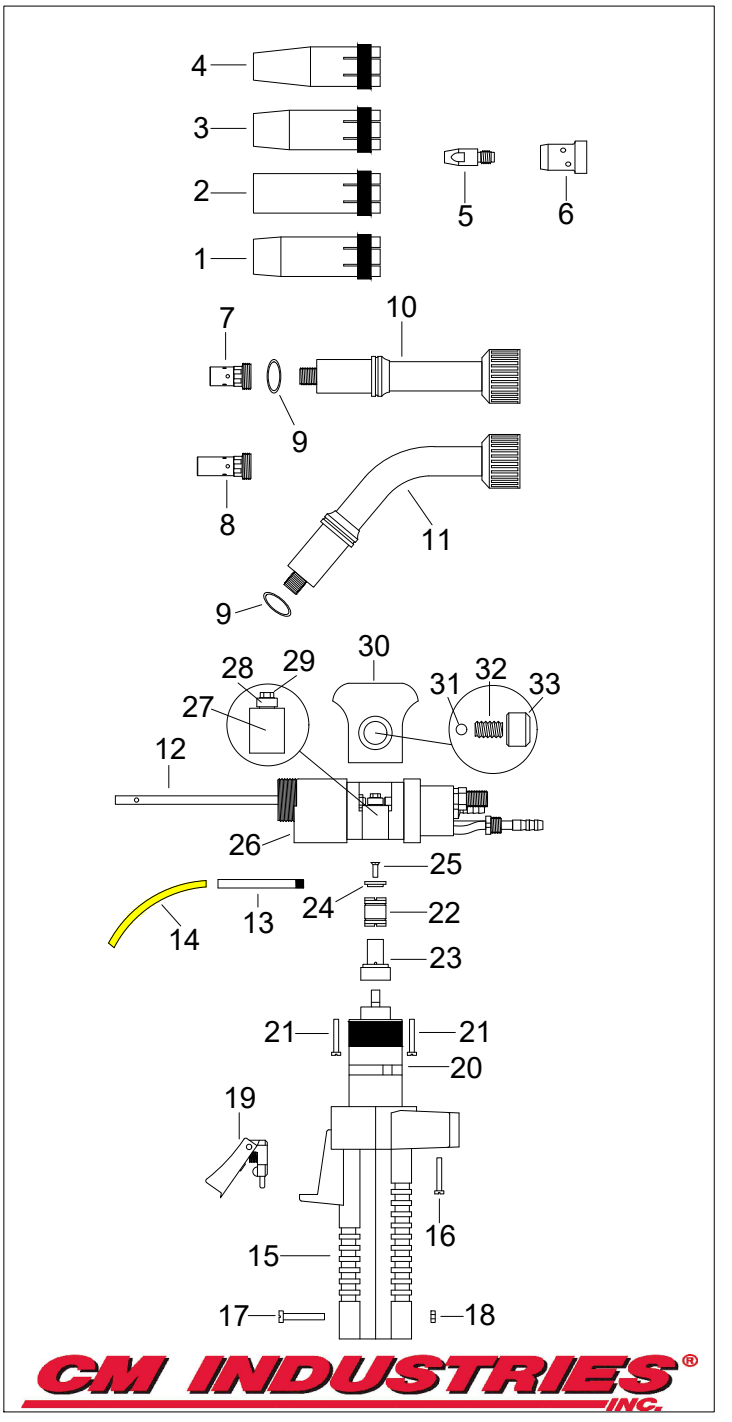

CM INDUSTRIES INC.

COPYRIGHT © 2025 CM INDUSTRIES, INC. ALL RIGHTS RESERVED

#	Part Number	Description
23.	600-20-035	Drive Roll Seat
24.	600-11-023	Washer for Drive Roll
25.	600-03-023	Screw, Drive Roll
26.	600-42-122	Torch Body
27.	600-03-008	Idler Arm
28.	600-03-010	Idler Roll
29.	600-03-022	Hex Nut, Idler Arm
30.	600-03-009	Drive Roll Cap, w/ Hardware
31.	600-25-022	Ball, Drive Roll Cap
32.	600-25-023	Spring, Drive Roll Cap
33.	600-25-024	Knob, Drive Roll Cap
34.	300-05-009	Female Electrical Connector
35.	300-05-010	Male Electrical Connector
36.	350-61-095	Hose Clamp w/ Bridge, 9.5mm
37.	350-60-095	Hose Clamp, 9.5mm
	Items 38-43 are available in lengths 10, 15, and 25 feet	
38.	310-52-0xx	Water Hose, IN, Blue
39.	600-36-0xx	Power Cable
40.	600-35-0xx	Wire Conduit
41.	310-55-0xx	Gas Hose
42.	300-05-0xx	Trigger Wire
43.	216-52-0xx	Outer Cable Cover
44.	600-20-005	Cable Support Screw
45.	600-20-006	Cable Support, Push-Pull
46.	260-52-001	Cable Support
47.	185-52-001	Cable Support Spring
48.	260-52-202	Adaptor Support
49.	285-01-001	Adaptor Support Screw
50.	310-53-002	Water Hose, OUT, Red, 2'8"
51.	350-52-001	Male Water Fitting
52.	401-00-001	Adaptor Nut
53.	300-05-010	Female Electrical Connector
54.	401-02-052	Adaptor Block
55.	285-03-002	Male Pin w/ Lead
56.	285-00-002	O-ring, Adaptor Block
57.	401-01-001	Liner Retaining Nut
58.	255-18-010	Teflon Liner Blue, 10', .023"-.035"
	255-18-015	Teflon Liner Blue, 15', .023"-.035"
	255-18-025	Teflon Liner Blue, 25', .023"-.035"
	255-10-010	Teflon Liner Red, 10', .035"-.045"
	255-10-015	Teflon Liner Red, 15', .035"-.045"
	255-10-025	Teflon Liner Red, 25', .035"-.045"
	255-05-010	Teflon Liner Yellow, 10', .045"-1/16"
	255-05-015	Teflon Liner Yellow, 15', .045"-1/16"
	255-05-025	Teflon Liner Yellow, 25', .045"-1/16"
59.	259-10-001	Repl. Collet, for Red & Blue Teflon Liner
	259-05-001	Repl. Collet, for Yellow Teflon Liner

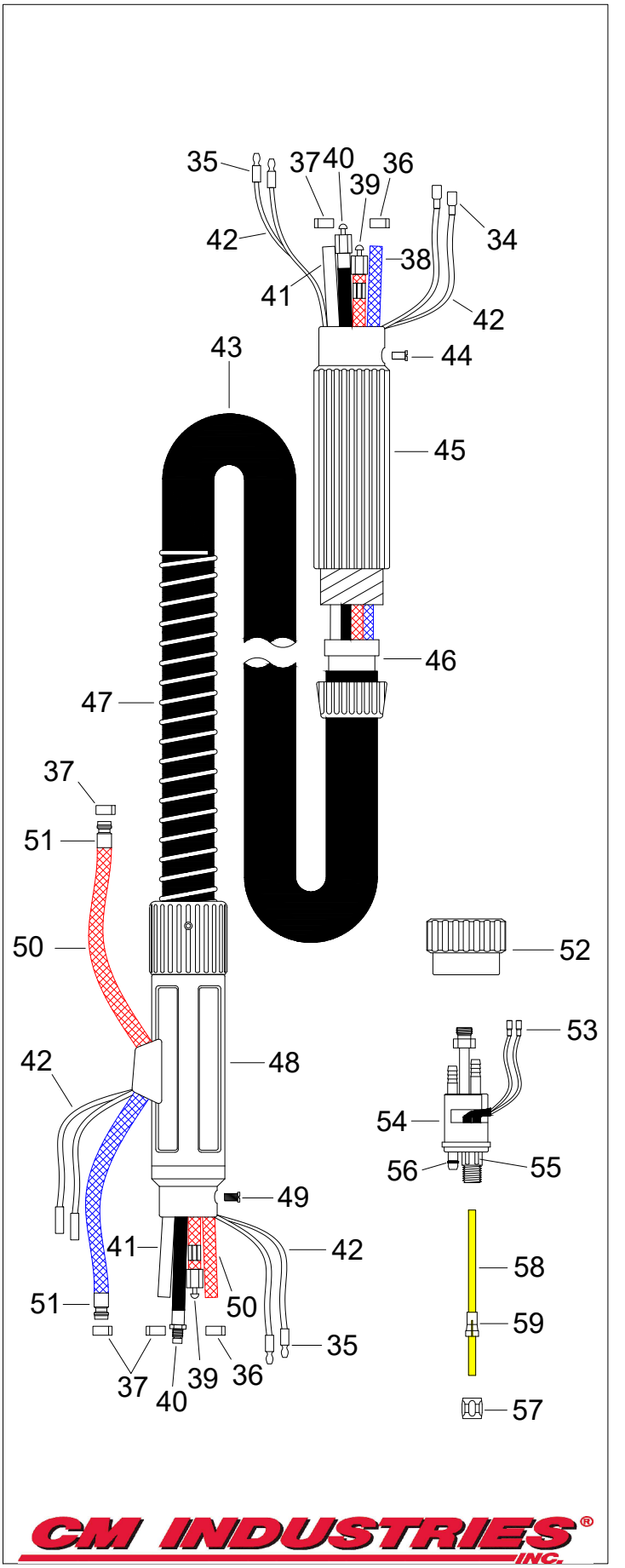

COPYRIGHT © 2025 CM INDUSTRIES, INC. ALL RIGHTS RESERVED

SM25A

SMOKE EXTRACTOR AIR-COOLED MIG GUN

Replacement Suitable for Binzel

RATING	GUN ORDERING PART NUMBER	GUN PLUG Direct Connect
230 Amp CO2 @ 60% Duty Cycle **200 Amp Mixed Gas @ 60% Duty Cycle** **Wire Capacity: 0.030" (0.8mm) - 0.045" (1.2mm)**	725-25-0xx	**Euro**
	725-25-Lxx	**Lincoln® LN**
	725-25-LFx	**Lincoln® LF & Power Feed**
	725-25-Rxx	**Lincoln® Power MIG**
	725-25-Mxx	**Miller®**
	725-25-TXX	**Tweco®**
	xx = Standard lengths of 10, 12, 15, 20 and 25 ft. Custom lengths also available.	

#	Part Number	Description
1.	165-25-001	Nozzle, Conical, 9/16" I.D., **Std.**
	165-25-002	Nozzle, Cylindrical, 11/16" I.D.
	165-25-011	Nozzle, Conical Small, 7/16" I.D.
2.	150-06-120	Contact Tip, M6, .024" 0.6mm
	150-08-120	Contact Tip, M6, .030" 0.8mm
	150-09-120	Contact Tip, M6, .035" 0.9mm, **Std.**
	150-10-120	Contact Tip, M6, .040" 1.0mm
	150-12-120	Contact Tip, M6, .045" 1.2mm
3.	160-06-025	Contact Tip Holder, M6, **Std.**
4.	165-25-400	Fume Nozzle
5.	052-25-045	Swan Neck
6.	035-25-002	Nozzle Spring
7.	171-66-101	Handle Assembly (Items 7-11)
8.	171-66-105	Fume Controller
9.	171-66-109	Trigger
10.	171-66-129	Trigger Spring
11.	170-66-005	Handle Screw
12.	171-66-123	Micro Switch
13.	290-01-010	Hex Nut
14.	210-25-510	Power Cable, 10'
	210-25-512	Power Cable, 12'
	210-25-515	Power Cable, 15'
	210-25-520	Power Cable, 20'
	210-25-525	Power Cable, 25'
15.	261-25-005	Front Connector
16.	219-25-010	Flex Hose, 10'
	219-25-012	Flex Hose, 12'
	219-25-015	Flex Hose, 15'
	219-25-020	Flex Hose, 20'
	219-25-025	Flex Hose, 25'

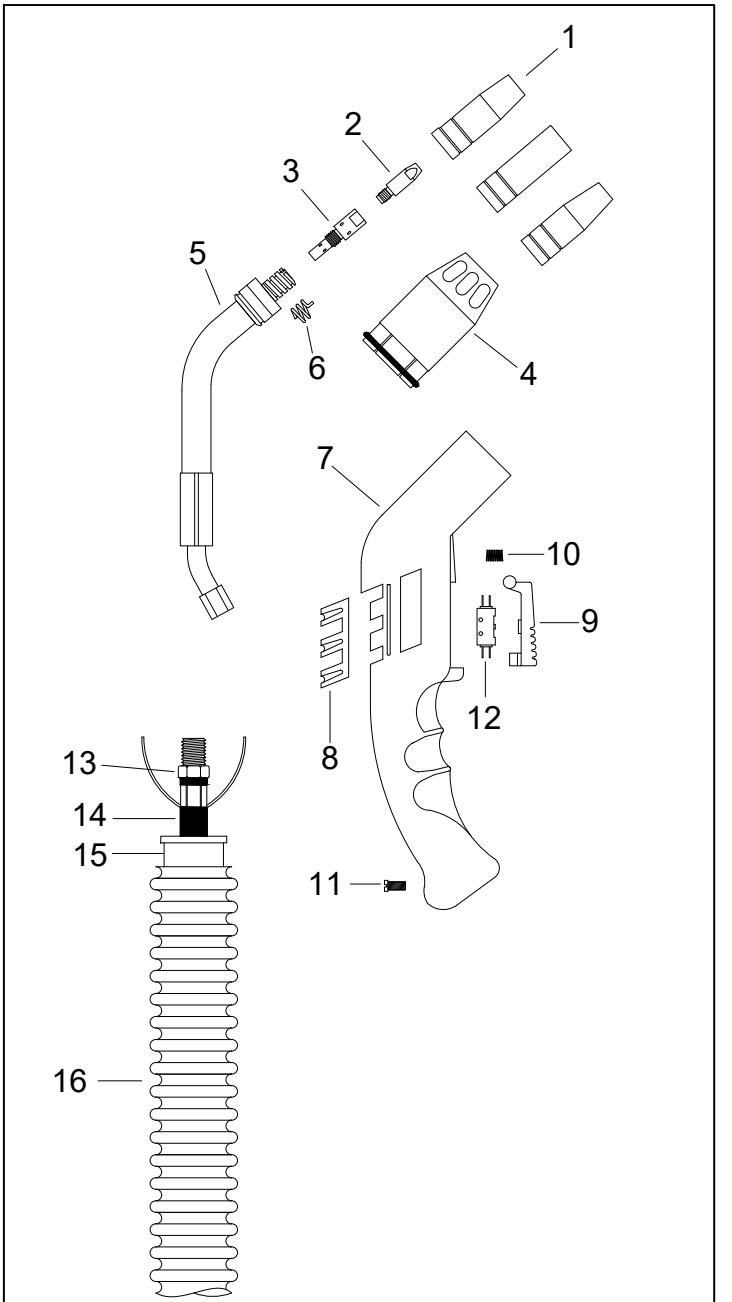

CM INDUSTRIES® INC.

COPYRIGHT © 2025 CM INDUSTRIES, INC. ALL RIGHTS RESERVED

#	Part Number	Description
17.	261-25-004	Hose Clamp
18.	261-25-003	Rear Aluminum Connector
19.	261-25-002	Adaptor Support
20.	401-00-001	Adaptor Nut
21.	300-05-010 300-05-009	Male Electrical Connector Female Electrical Connector
22.	401-02-014	Connector Block, Complete
23.	285-00-002	O-Ring, Connector Block
24.	401-01-001	Liner Retaining Nut
25.	401-02-012	Connector Plug Block
26.	401-02-016	Connector Plug, Tweco, Lincoln
27.	C224	O-Ring
28.	401-01-004	Liner Retaining Plug
29.	401-02-017	Connector Plug, Miller
30.	079-974	O-Ring, Miller
31.	401-01-002	Liner Nut, Miller
32.	401-02-015	Connector Plug, Lincoln LN
33.	300-05-001	Electrical Plug, Miller
34.	300-05-002	Electrical Plug, Lincoln
35.	241-26-016 241-22-016	Liner #26, 15', .023"-.035" Liner #22, 15', .035"-.045"
36.	255-18-010 255-18-010 255-18-010 255-10-010 255-10-012 255-10-015	Teflon Liner Blue, 10', .023"-.035" Teflon Liner Blue, 10', .023"-.035" Teflon Liner Blue, 10', .023"-.035" Teflon Liner Red, 10', .035"-.045" Teflon Liner Red, 12', .035"-.045" Teflon Liner Red, 15', .035"-.045"
37.	259-10-001	Repl. Collet, for Red & Blue Teflon Liner

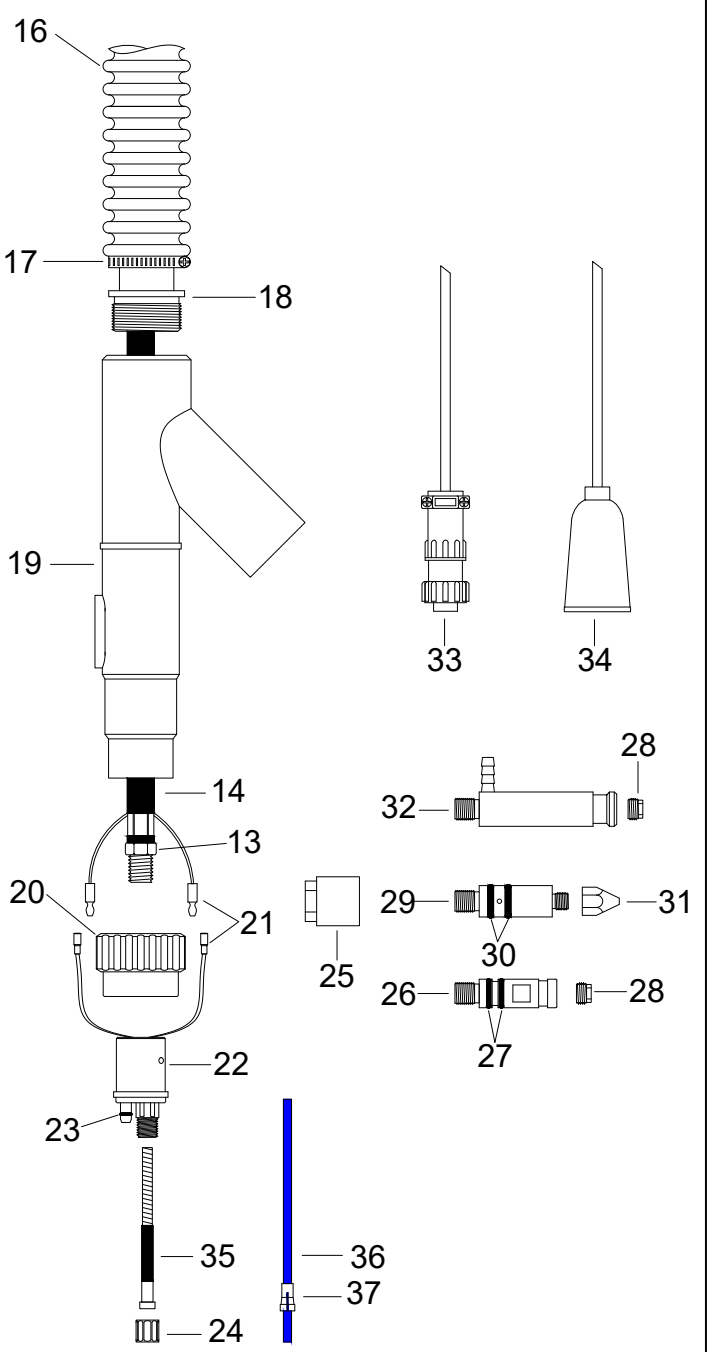

COPYRIGHT © 2025 CM INDUSTRIES, INC. ALL RIGHTS RESERVED

SM36A

SMOKE EXTRACTOR AIR-COOLED MIG GUN

Replacement Suitable for Binzel

RATING	GUN ORDERING PART NUMBER	GUN PLUG Direct Connect
360 Amp CO2 @ 60% Duty Cycle **320 Amp Mixed Gas @ 60% Duty Cycle** **Wire Capacity: 0.030" (0.8mm) - 0.062" (1.6mm)**	725-36-0xx	**Euro**
	725-36-Lxx	**Lincoln® LN**
	725-36-LFxx	**Lincoln® LF & Power Feed**
	725-36-Rxx	**Lincoln® Power MIG**
	725-36-Mxx	**Miller®**
	725-36-Txx	**Tweco®**
	xx = Standard lengths of 10, 12, 15, 20 and 25 ft. Custom lengths also available.	

#	Part Number	Description
1.	165-36-001	Nozzle, Conical, 5/8" I.D., **Std.**
	165-36-002	Nozzle, Cylindrical, 3/4" I.D.
	165-36-011	Nozzle, Conical Small, 1/2" I.D.
2.	150-08-120	Contact Tip, .030" (0.8mm)
	150-09-120	Contact Tip, .035" (0.9mm), **Std.**
	150-10-120	Contact Tip, .040" (1.0mm)
	150-12-120	Contact Tip, .045" (1.2mm)
	150-14-120	Contact Tip, .052" (1.4mm)
	150-16-120	Contact Tip, .062" (1.6mm)
3.	160-06-036	Tip Holder, **Std.**
	160-06-136	Tip Holder, Long
4.	165-36-400	Fume Nozzle
5.	046-36-001	Insulator/Gas Diffuser, White, **Std.**
	046-36-002	Insulator/Gas Diffuser, Heat Resistant Black
6.	052-36-045	Swan Neck
7.	171-66-101	Handle Assembly (Items 7-11)
8.	171-66-105	Fume Controller
9.	171-66-109	Trigger
10.	171-66-129	Trigger Spring
11.	170-66-005	Handle Screw
12.	171-66-123	Micro Switch
13.	290-01-010	Hex Nut
14.	210-36-510	Power Cable, 10'
	210-36-512	Power Cable, 12'
	210-36-515	Power Cable, 15'
	210-36-520	Power Cable, 20'
	210-36-525	Power Cable, 25'
15.	261-25-005	Front Connector
16.	219-25-010	Vacuum Hose, 10'
	219-25-012	Vacuum Hose, 12'
	219-25-015	Vacuum Hose, 15'
	219-25-020	Vacuum Hose, 20'
	219-25-025	Vacuum Hose, 25'

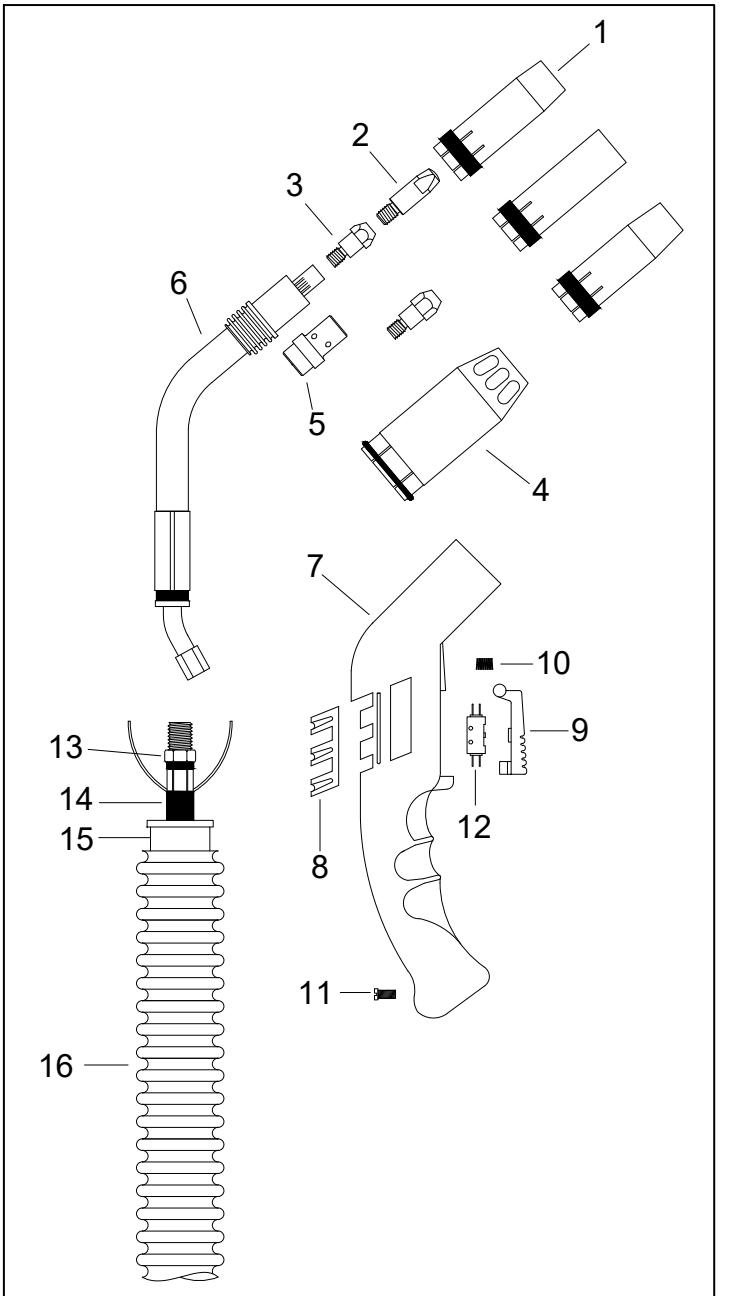

CM INDUSTRIES® INC.

COPYRIGHT © 2025 CM INDUSTRIES, INC. ALL RIGHTS RESERVED

#	Part Number	Description
17.	261-25-004	Hose Clamp
18.	261-25-003	Rear Aluminum Connector
19.	261-25-002	Adaptor Support
20.	401-00-001	Adaptor Nut
21.	300-05-010	Male Electrical Connector
	300-05-009	Female Electrical Connector
22.	401-02-014	Connector Block, Complete
23.	285-00-002	O-Ring, Connector Block
24.	401-01-001	Liner Retaining Nut
25.	401-02-012	Connector Plug Block
26.	401-02-016	Connector Plug, Tweco & Lincoln Power MIG
27.	C224	O-Ring
28.	401-01-004	Liner Retaining Plug
29.	401-02-017	Connector Plug, Miller
30.	M079-974	O-Ring, Miller
31.	401-01-002	Liner Nut, Miller
32.	401-02-015	Connector Plug, Lincoln LN
33.	B8631	Gas Hose Nipple
34.	300-05-001	Electrical Plug, Miller
35.	300-05-002	Electrical Plug, Lincoln LN, LF, & Power Feed
36.	241-26-016	Liner #26, 15', .023"-.035"
	241-22-016	Liner #22, 15', .035"-.045", **Std.**
	241-23-016	Liner #23, 15', .052"-1/16"
	241-26-027	Liner #26, 25', .023"-.035"
	241-22-027	Liner #22, 25', .035"-.045"
	241-23-027	Liner #23, 25', .052"-1/16"
37.	255-18-010	Teflon Liner, Blue, 10', .023"-.035"
	255-18-012	Teflon Liner, Blue, 12', .023"-.035"
	255-18-015	Teflon Liner, Blue, 15', .023"-.035"
	255-18-020	Teflon Liner, Blue, 20', .023"-.035"
	255-10-010	Teflon Liner, Red, 10', .035"-.045"
	255-10-012	Teflon Liner, Red, 12', .035"-.045"
	255-10-015	Teflon Liner, Red, 15', .035"-.045"
	255-10-020	Teflon Liner, Red, 20', .035"-.045"
	255-05-010	Teflon Liner, Yellow, 10', .045"-1/16"
	255-05-012	Teflon Liner, Yellow, 12', .045"-1/16"
	255-05-015	Teflon Liner, Yellow, 15', .045"-1/16"
	255-05-020	Teflon Liner, Yellow, 20', .045"-1/16"
38.	259-10-001	Repl. Collet, Teflon Liner, Red & Blue
	259-05-001	Repl. Collet, Teflon Liner, Yellow

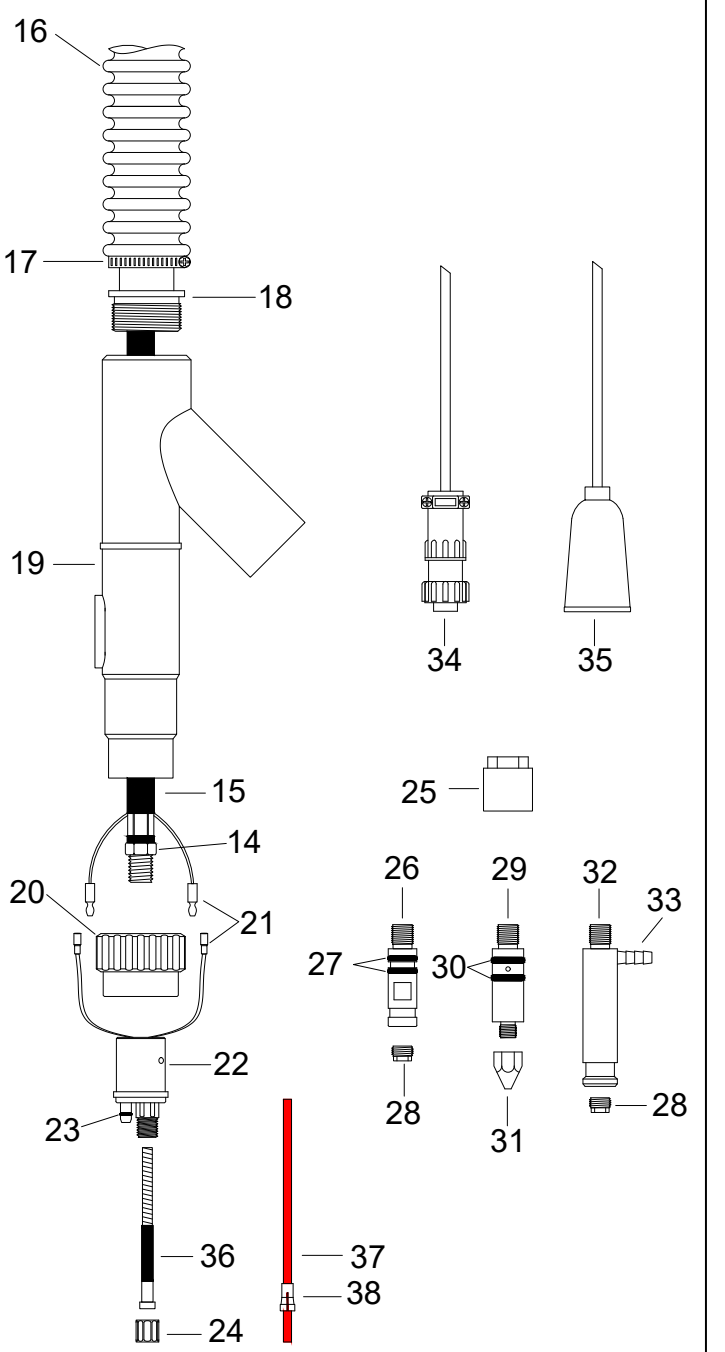

COPYRIGHT © 2025 CM INDUSTRIES, INC. ALL RIGHTS RESERVED

MIL H10

AIR-COOLED MIG GUN

Replacement Suitable for Miller®

RATING	GUN ORDERING PART NUMBER			GUN PLUG Direct Connect
150 Amp CO2 @ 100% Duty Cycle **150 Amp Mixed Gas @ 60% Duty Cycle** **Wire Capacity: 0.023" (0.6mm) - 0.045" (1.2mm)**	195-957	10'	w/ Spade Terminals	**Handler®** **135, 140, 175, 180, 211**
	195-958	12'	w/ Spade Terminals	
	195-959	15'	w/ Spade Terminals	
	195-957-P	10'	w/ Miller Control Wire	**Handler®** **210MVP**
	195-958-P	12'	w/ Miller Control Wire	
	195-959-P	15'	w/ Miller Control Wire	

#	Part Number	Description
1.	169-715	Nozzle 1/2", Flush Tip
2.	087-299	Contact Tip, .023" 0.6mm
	000-067	Contact Tip, .030" 0.8mm, **Std.**
	000-068	Contact Tip, .035" 0.9mm
	000-069	Contact Tip, .045" 1.2mm
3.	169-716	Tip Adapter
	170-470	Repl. Retaining Ring
4.	169-717	Shock Washer
5.	169-718	Conductor Tube Assembly, 45°
6.	169-718N	Repl. Neoprene
7.	R210-100	Handle w/ Post & Screws
8.	246-376	Trigger
9.	R210-102	Repl. Handle Post & Screw
10.	R210-103	Screw
11.	185-26-001	Cable Support Spring
12.	300-05-003	Wire Terminal
13.	150-010	Power Cable, 10'
	150-012	Power Cable, 12'
	150-015	Power Cable, 15'
14.	246-380S	Cable Support Spring
15.	246-380	Cable Support
16.	285-01-001	Screw
17.	209-494	H10 Power Pin
18.	197-123	O-Ring
19.	300-05-004	Spade Terminal
20.	300-05-001	Electrical Plug, Miller
21.	194-010	Liner Assembly, 15', .023"-.025"
	194-011	Liner Assembly, 15', .030"-.035", **Std.**
	194-012	Liner Assembly, 15', .035"-.045"
	194-014	Liner Assembly, 15', .035"-3/64", Aluminum
22.	079-975	Liner O-Ring

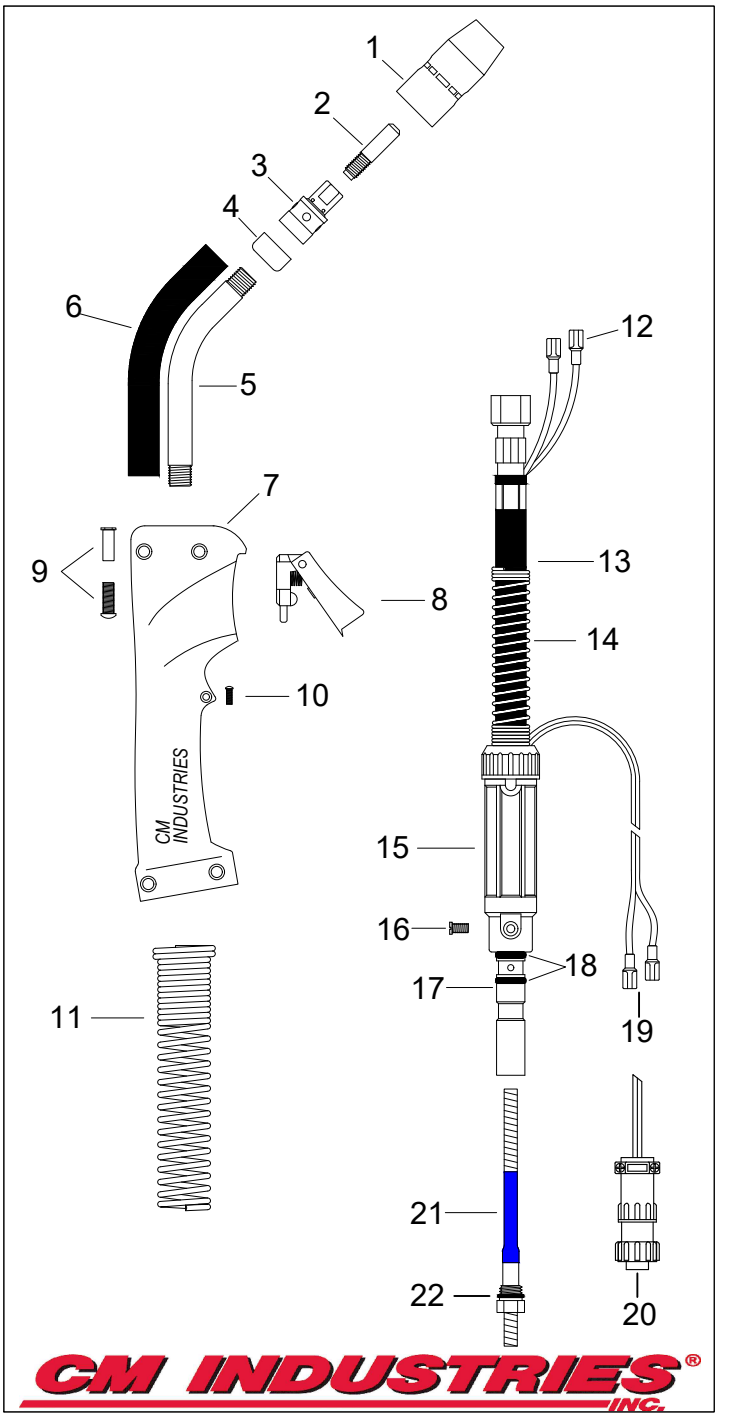

CM INDUSTRIES® INC.

COPYRIGHT © 2025 CM INDUSTRIES, INC. ALL RIGHTS RESERVED

MIL M10 & M15 AIR-COOLED MIG GUN

Replacement Suitable for Miller®

RATING	GUN ORDERING PART NUMBER		GUN PLUG Direct Connect
200 Amp CO2 @ 60% Duty Cycle **150 Amp Mixed Gas @ 60% Duty Cycle** **Wire Capacity: 0.023" (0.6mm) - 0.045" (1.2mm)**	169-589	10'	**Miller®**
	169-589AL	10' Aluminum	
	169-591	12'	
	169-593	15'	
	Direct Plugs available for **Euro**, **Hobart**, **Lincoln LN**, **Lincoln Power MIG**, and **Tweco**.		

#	Part Number	Description
1.	169-715	Nozzle 1/2", Flush Tip
2.	087-299	Contact Tip, .023" 0.6mm
	000-067	Contact Tip, .030" 0.8mm, **Std.**
	000-068	Contact Tip, .035" 0.9mm
	000-069	Contact Tip, .045" 1.2mm
3.	169-716	Tip Adapter
	170-470	Repl. Retaining Ring
4.	169-717	Shock Washer
5.	169-718	Conductor Tube Assembly w/ Neoprene Hose
6.	169-718N	Repl. Neoprene Hose
7.	R210-100	Handle w/ Post & Screws
8.	246-376	Trigger
9.	R210-102	Repl. Handle Post & Screw
10.	R210-103	Screw
11.	185-26-001	Spring
12.	300-05-003	Wire Terminal
13.	150-010	Power Cable, 10'
	150-012	Power Cable, 12'
	150-015	Power Cable, 15'
14.	246-380S	Cable Support Spring
15.	246-380	Cable Support
16.	285-01-001	Screw
17.	242-833	Miller Power Pin
18.	079-974	O-Ring
19.	300-05-001	Electrical Plug, Miller
20.	194-010	Liner Assembly, 15', .023"-.025"
	194-011	Liner Assembly, 15', .030"-.035", **Std.**
	194-012	Liner Assembly, 15', .035"-.045"
	194-014	Liner Assembly, 15', .035"-3/64", Aluminum
21.	079-975	Liner O-Ring

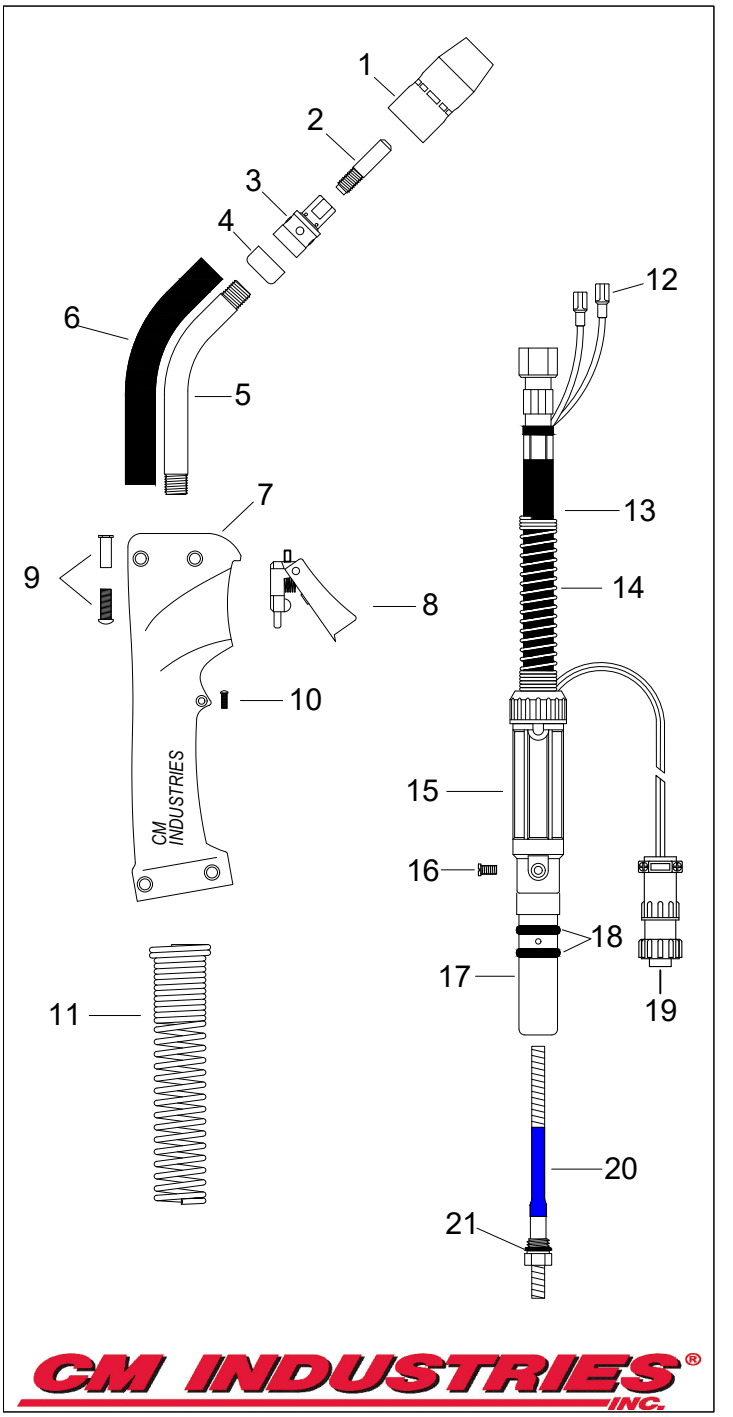

COPYRIGHT © 2025 CM INDUSTRIES, INC. ALL RIGHTS RESERVED

MIL M25

AIR-COOLED MIG GUN

Replacement Suitable for Miller®

RATING	GUN ORDERING PART NUMBER			GUN PLUG Direct Connect
250 Amp CO2 @ 100% Duty Cycle **250 Amp Mixed Gas @ 60% Duty Cycle** **Wire Capacity: 0.030" (0.8mm) - 0.045" (1.2mm)**	**Length**	**.035" Liner**	**.045" Liner**	**Miller®**
	10'	169-594	169-595	
	12'	169-596	169-597	
	15'	169-598	169-599	
	20'	169-598-20	169-599-20	
	25'	169-598-25	169-599-25	
	Direct Plugs available for **Euro**, **Hobart**, **Lincoln LN**, **Lincoln Power MIG**, and **Tweco**.			

#	Part Number	Description
1.	200-258	Nozzle 1/2", Flush Tip
	169-724	Nozzle 1/2", Recess 1/8"
	169-725	Nozzle 5/8", Recess 1/8", **Std.**
	169-726	Nozzle 5/8", Flush Tip
	169-727	Nozzle 5/8", Stickout 1/8"
	176-243	Nozzle 3/8" Tapered
2.	087-299	Contact Tip, .023" 0.6mm
	000-067	Contact Tip, .030" 0.8mm
	000-068	Contact Tip, .035" 0.9mm
	000-069	Contact Tip, .045" 1.2mm
3.	169-728	Tip Adaptor
4.	169-729	Nozzle Retainer
	170-467	Repl. Retaining Ring
	170-468	Repl. O-Ring
5.	169-730	Shock Washer
6.	169-731	Conductor Tube, 45°
7.	R210-100	Handle w/ Post & Screws
8.	246-376	Trigger
9.	R210-102	Repl. Handle Post & Screw
10.	R210-103	Screw
11.	300-05-003	Wire Terminal
12.	250-010	Power Cable, 10'
	250-012	Power Cable, 12'
	250-015	Power Cable, 15'
13.	185-36-001	Spring
14.	260-01-M25	Cable Support
15.	285-01-001	Screw
16.	209-487	Miller Power Pin
17.	079-974	O-Ring
18.	300-05-001	Electrical Plug
19.	194-010	Liner Assembly, 15', .023"-.025"
	194-011	Liner Assembly, 15', .030"-.035"
	194-011-25	Liner Assembly, 25', .030"-.035"
	194-012	Liner Assembly, 15', .035"-.045"
	194-012-25	Liner Assembly, 25', .035"-.045"
	194-014	Liner Assembly, 15', .035"-3/64", Aluminum
20.	079-975	Liner O-Ring

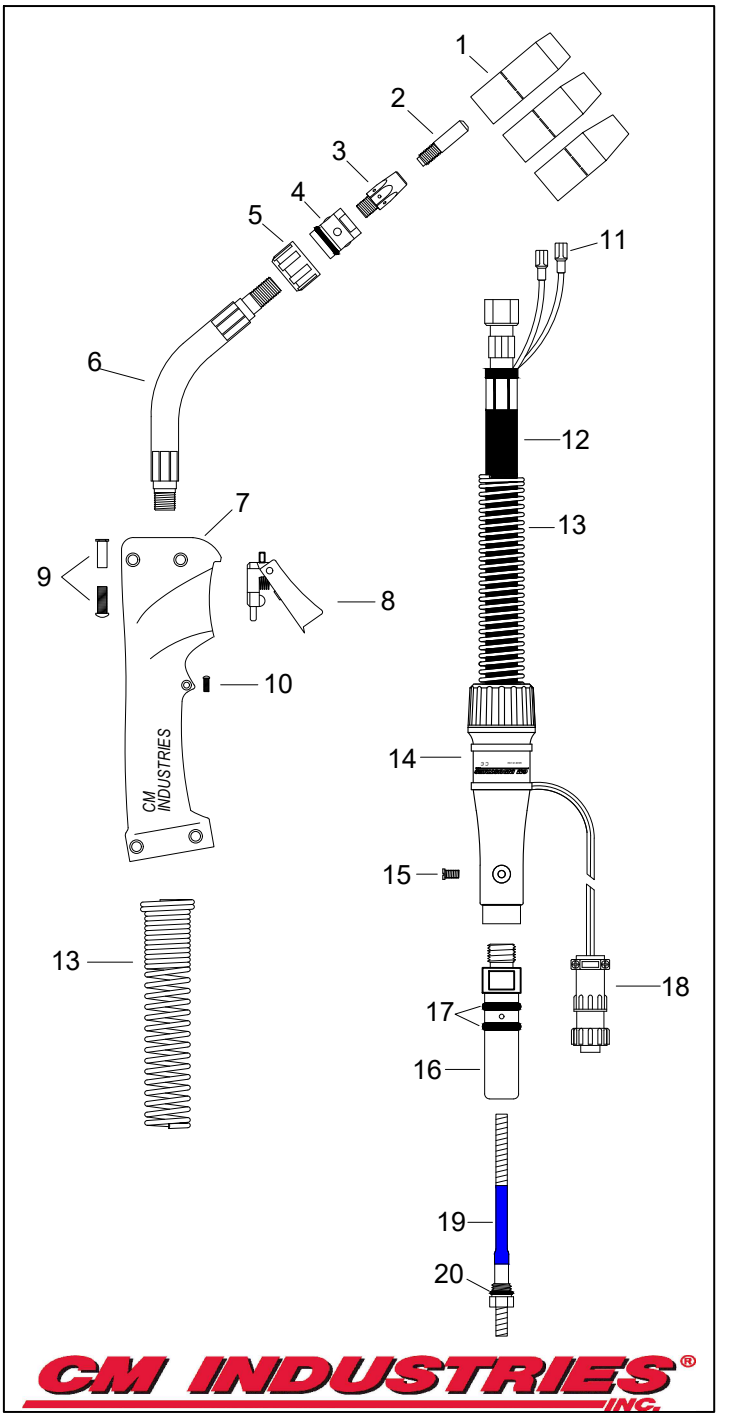

CM INDUSTRIES® INC.

COPYRIGHT © 2025 CM INDUSTRIES, INC. ALL RIGHTS RESERVED

MIL M100 & M150 AIR-COOLED MIG GUN

Replacement Suitable for Miller®

RATING	GUN ORDERING PART NUMBER			GUN PLUG Direct Connect
200 Amp CO2 @ 60% Duty Cycle **150 Amp Mixed Gas @ 60% Duty Cycle** **Wire Capacity: 0.023" (0.6mm) - 0.045" (1.2mm)**	248-282	M100	10'	**Miller®**
	249-039	M150	10'	
	249-040	M150	12'	
	249-041	M150	15'	
	Direct Plugs available for **Euro**, **Hobart**, **Lincoln LN**, **Lincoln Power MIG**, and **Tweco**.			

#	Part Number	Description
1.	169-715	Nozzle 1/2", Flush Tip
2.	087-299	Contact Tip, .023" 0.6mm
	000-067	Contact Tip, .030" 0.8mm, **Std.**
	000-068	Contact Tip, .035" 0.9mm
	000-069	Contact Tip, .045" 1.2mm
3.	169-716	Tip Adapter
	170-470	Repl. Retaining Ring
4.	169-717	Shock Washer
5.	169-718	Conductor Tube Assembly w/ Neoprene Hose
6.	169-718N	Repl. Neoprene Hose
7.	R210-100	Handle w/ Post & Screws
8.	246-376	Trigger
9.	R210-102	Repl. Handle Post & Screw
10.	R210-103	Screw
11.	185-26-001	Spring
12.	300-05-003	Wire Terminal
13.	150-010	Power Cable, 10'
	150-012	Power Cable, 12'
	150-015	Power Cable, 15'
14.	246-380S	Cable Support Spring
15.	246-380	Cable Support
16.	285-01-001	Screw
17.	242-833	Miller Power Pin
18.	079-974	O-Ring
19.	300-05-001	Electrical Plug, Miller
20.	194-010	Liner Assembly, 15', .023"-.025"
	194-011	Liner Assembly, 15', .030"-.035", **Std.**
	194-012	Liner Assembly, 15', .035"-.045"
	194-014	Liner Assembly, 15', .035"-3/64", Aluminum
21.	079-975	Liner O-Ring

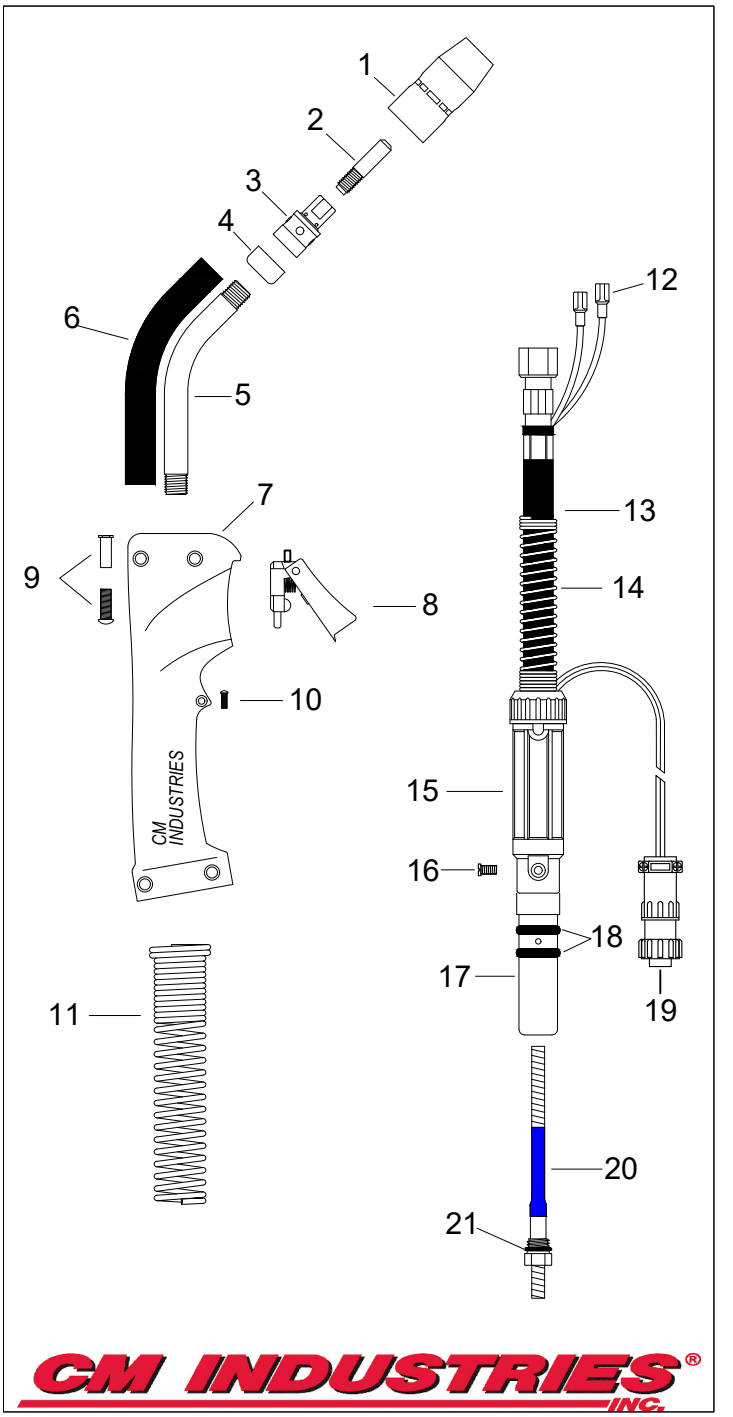

COPYRIGHT © 2025 CM INDUSTRIES, INC. ALL RIGHTS RESERVED

TRG 450W

WATER-COOLED MIG GUN

Replacement Suitable for Tregaskiss®

RATING	GUN ORDERING PART NUMBER		GUN PLUG Direct Connect
	.045"	1/16"	
450 Amp CO2 @ 80% Duty Cycle	R45xx-45	R45xx-116	**Tweco® #4**
325 Amp Mixed Gas @ 80% Duty Cycle	RLN45xx-45	RLN45xx-116	**Lincoln® LN**
	RLF45xx-45	RLF45xx-116	**Lincoln® LF/ Power Feed**
Wire Capacity: 0.030" (0.8mm) - 5/64" (2.0mm)	RM45xx-45	RM45xx-116	**Miller®**
	xx = Standard lengths of 10, 12, 15, 20 and 25 ft. Custom lengths also available.		

#	Part Number	Description
1.	R401-4-50	Nozzle, 1/2", 1/8" Tip Recess
	R401-4-62	Nozzle, 5/8", 1/8" Tip Recess
	R401-4-75	Nozzle, 3/4", 1/8" Tip Recess
	R401-5-62	Nozzle, H.D., 5/8", 1/4" Tip Recess
	R401-5-75	Nozzle, H.D., 3/4", 1/4" Tip Recess
	R401-6-50	Nozzle, H.D., 1/2", 1/8" Tip Recess
	R401-6-62	Nozzle, H.D., 5/8", 1/8" Tip Recess, **Std.**
	R401-6-75	Nozzle, H.D., 3/4", 1/8" Tip Recess
	R401-7-62	Nozzle, H.D., 5/8", 1/4" Tip Recess, Brass
	R401-7-75	Nozzle, H.D., 3/4", 1/4" Tip Recess, Brass
	R401-7-87	Nozzle, H.D., 7/8", 1/4" Tip Recess, Brass
	R401-8-62	Nozzle, 5/8", 1/8" Tip Stickout, Short Arc
	R401-81-62	Nozzle, H.D., 5/8", 1/8" Tip Stickout, Short Arc
	CM "Taper-LOCK" Contact Tips	
2.	155-1-030	H.D. Contact Tip, .030" (0.8mm)
	155-1-035	H.D. Contact Tip, .035" (0.9mm)
	155-1-040	H.D. Contact Tip, .040" (1.0mm)
	155-1-045	H.D. Contact Tip, .045" (1.2mm)
	155-1-364	H.D. Contact Tip, 3/64" (1.2mm)
	155-1-052	H.D. Contact Tip, .052" (1.4mm)
	155-1-062	H.D. Contact Tip, .062" (1.6mm)
	155-1-564	H.D. Contact Tip, 5/64" (2.0mm)
3.	155-2-030	H.D. Tapered Contact Tip, .030" (0.8mm)
	155-2-035	H.D. Tapered Contact Tip, .035" (0.9mm)
	155-2-040	H.D. Tapered Contact Tip, .040" (1.0mm)
	155-2-045	H.D. Tapered Contact Tip, .045" (1.2mm)
	155-2-364	H.D. Tapered Contact Tip, 3/64" (1.2mm)
	155-2-052	H.D. Tapered Contact Tip, .052" (1.4mm)
	155-2-062	H.D. Tapered Contact Tip, .062" (1.6mm)
4.	154-R505	Diffuser H.D., for Taper-LOCK™ Tip, **Std.**
	154-R506	Diffuser, for Taper-LOCK™ Tip
5.	154-1	Repl. Retaining Ring
6.	154-2	Repl. O-Ring
7.	R458-1	Neck Insulator
8.	R455-45	Neck Assy., 45°
	R455-60	Neck Assy., 60°, **Std.**
	R455-180	Neck Assy., 180°

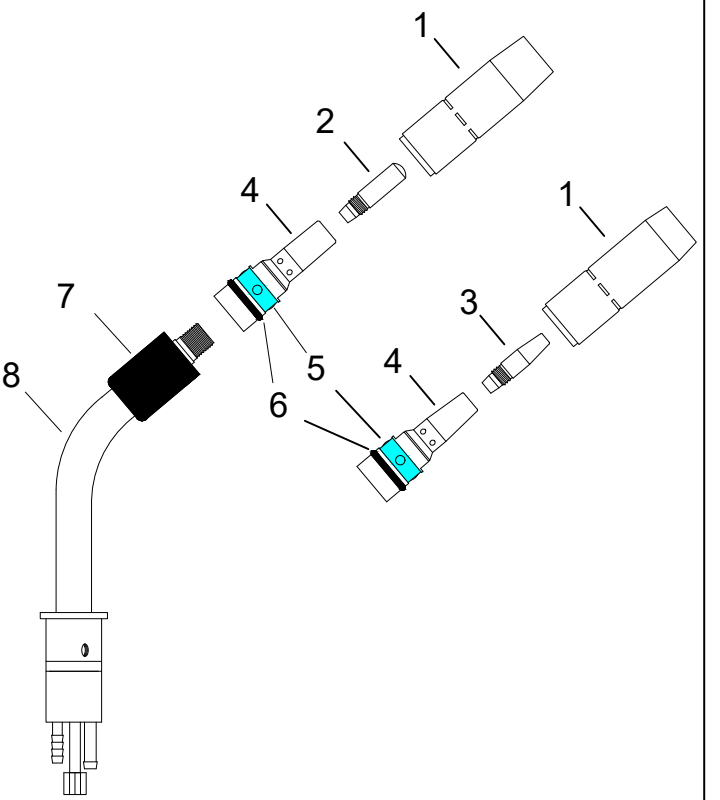

CM INDUSTRIES® INC.

COPYRIGHT © 2025 CM INDUSTRIES, INC. ALL RIGHTS RESERVED

#	Part Number	Description
9.	R411-1	Switch Only
10.	R412-1	Switch Terminals
11.	R411-2	Switch Housing
12.	R411-3	Mounting Screw
13.	R610	Handle
14.	185-52-001	Spring Guard
15.	R663-1-10	Cable Cover, 10'
	R663-1-12	Cable Cover, 12'
	R663-1-15	Cable Cover, 15'
	R663-1-20	Cable Cover, 20'
	R663-1-25	Cable Cover, 25'
16.	R659-10	Power Cable, 10'
	R659-12	Power Cable, 12'
	R659-15	Power Cable, 15'
	R659-20	Power Cable, 20'
	R659-25	Power Cable, 25'
17.	R656-10	Water Hose, 10'
	R656-12	Water Hose, 12'
	R656-15	Water Hose, 15'
	R656-20	Water Hose, 20'
	R656-25	Water Hose, 25'
18.	R656-1	Hose Clamp
19.	R657	Conduit (sold per ft.)
20.	R657-1	Conduit Clamp
21.	R416-5	Control Housing Only
22.	R664-400	Quick Connector Power Block Assembly
23.	R658-1	Blue Water Line IN, 2'
24.	R658	Red Water Line OUT, 2'
25.	350-52-001	Male Water Fitting
26.	R664-1	Power Pin, Tweco #4, Lincoln LF/ Power Feed
27.	R664-16	Power Pin, Lincoln LN
28.	B8631	Repl. Gas Hose Nipple
29.	R664-11-116	Power Pin, Miller
30.	R414-11-2	O-Ring, Miller
31.	R214-116	Power Pin Cap, Miller .035"-1/16" Wire
	R214-332	Power Pin Cap, Miller 5/64"-3/32" Wire
32.	300-05-002	Electrical Plug, Lincoln LF/ LN/ Power Feed
33.	300-05-001	Electrical Plug, Miller
34.	R415-30-15	Liner Assembly, 15', .030"
	R415-35-15	Liner Assembly, 15', .035"-.045"
	R415-116-15	Liner Assembly, 15', .045"-1/16"
	R415-564-15	Liner Assembly, 15', 1/16-5/64"
	R415-35-2	Liner Assembly, 15', .035"-3/64" Aluminum
	R415-116-2	Liner Assembly, 15', 3/64"-1/16" Aluminum
	R415-35-0	Teflon Liner Assy., 15', .035"-3/64", Aluminum
	R415-116-0	Teflon Liner Assy., 15', 3/64"-1/16", Aluminum
	R415-35-25	Liner Assembly, 25', .035"-.045"
	R415-116-25	Liner Assembly, 25', .045"-1/16"
	R415-564-25	Liner Assembly, 25', 1/16-5/64"

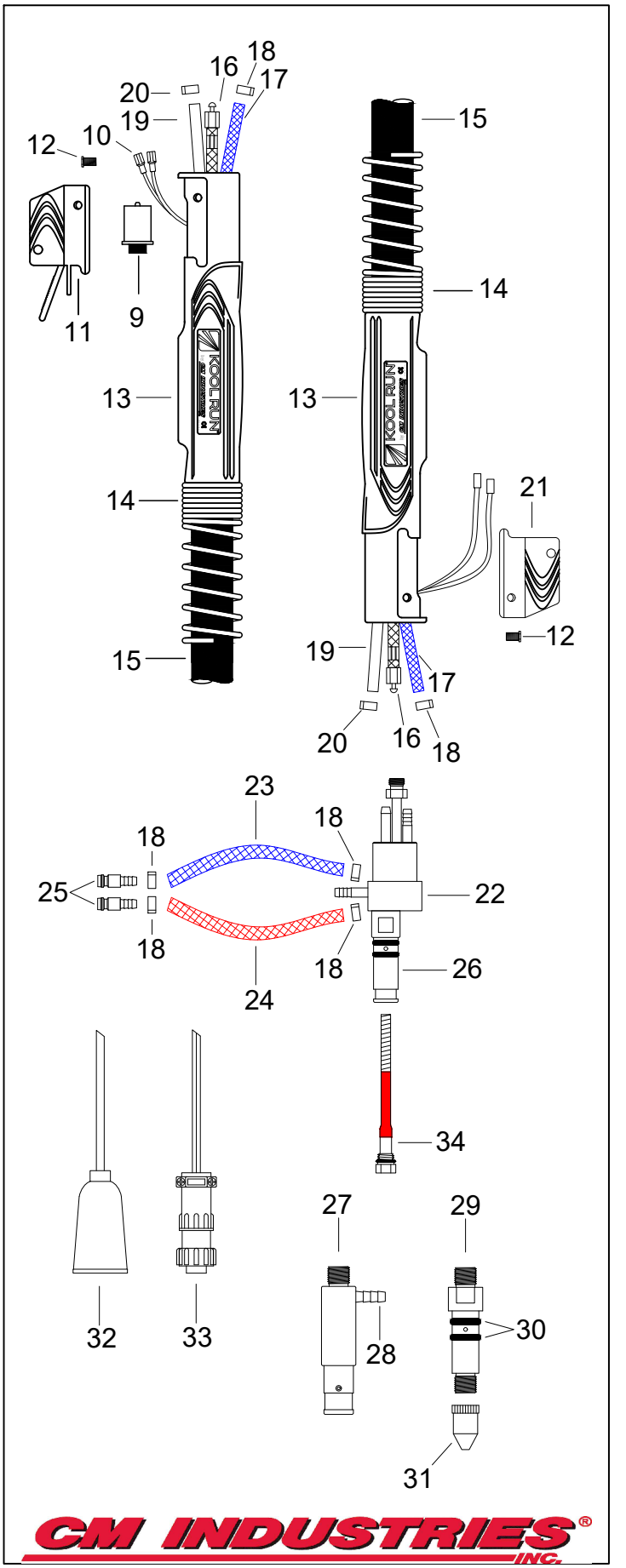

COPYRIGHT © 2025 CM INDUSTRIES, INC. ALL RIGHTS RESERVED

TWC 160

AIR-COOLED MIG GUN

Replacement Suitable for Tweco® MINI-MIG

RATING	GUN ORDERING PART NUMBER	GUN PLUG Direct Connect
160 Amp CO2 @ 80% Duty Cycle **100 Amp Mixed Gas @ 80% Duty Cycle** **Wire Capacity: 0.023" (0.6mm) - 0.045" (1.2mm)**	C35-xx CC35-xx CX35-xx CH35-xx CSP35-xx CL35-xx CLPM35-xx CM35-xx CT35-xx	**No Gun Plug** **Century®** **Euro** **Hobart®** **Lincoln® SP150 & SP200** **Linc.® SP100, 125, 135, 175** **Lincoln® W.M. / Power MIG** **Miller®** **Tweco®**
	xx = Standard lengths of 10, 12, and 15 ft. Custom lengths also available.	

#	Part Number	Description
1.	C21-50	Nozzle, 1/2" I.D., **Std.**
	C21-50-F	Nozzle, 1/2" I.D. Flush
	C21-62	Nozzle, 5/8" I.D.
	C21-62-F	Nozzle, 5/8" I.D. Flush
	C21-62-FAS	Spot Nozzle
	C21-37	Nozzle, 3/8" I.D.
	C21-37-F	Nozzle, 3/8" I.D. Flush
	C21T-37	Nozzle Tapered, 3/8" I.D.
	C21T-37-F	Nozzle Tapered, 3/8" I.D. Flush
2.	C11-23	Contact Tip, .023" 0.6mm
	C11-30	Contact Tip, .030" 0.8mm
	C11-35	Contact Tip, .035" 0.9mm, **Std.**
	C11-40	Contact Tip, .040" 1.0mm
	C11-45	Contact Tip, .045" 1.2mm
	C11H-35	Contact Tip, H.D., .035" 0.9mm
	C11H-45	Contact Tip, H.D., .045" 1.2mm
	C11AH-364	Contact Tip, H.D., Aluminum, 3/64"
	C11T-23	Contact Tip, Tapered, .023" 0.6mm
	C11T-30	Contact Tip, Tapered, .030" 0.8mm
	C11T-35	Contact Tip, Tapered, .035" 0.9mm
	C11T-40	Contact Tip, Tapered, .040" 1.0mm
	C11T-45	Contact Tip, Tapered, .045" 1.2mm
3.	C35-50	Gas Diffuser, **Std.**
4.	C35-60-45	Conductor Tube, 45°
	C35-60-60	Conductor Tube, 60°, **Std.**
	C35-60-180	Conductor Tube, 180° (Includes Items 4-6)
5.	C35-70	Repl. Conductor Tube Insulation
6.	C35-60-N	Repl. Conductor Tube Nut
7.	C35-80CM	Handle, TWC 160
8.	170-14-100	Trigger Switch
9.	C35K-TWC	Conductor Tube Adaptor, TWC 160
10.	300-05-003	Trigger Wire Connector
11.	C35-010CM	Power Cable, 10', TWC 160
	C35-012CM	Power Cable, 12', TWC 160
	C35-015CM	Power Cable, 15', TWC 160

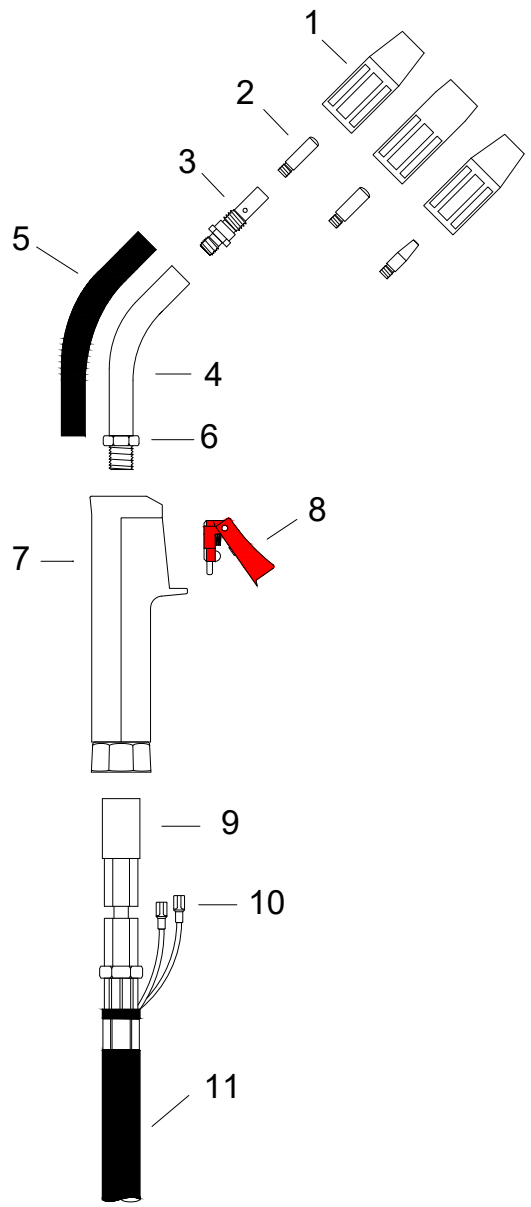

CM INDUSTRIES® INC.

COPYRIGHT © 2025 CM INDUSTRIES, INC. ALL RIGHTS RESERVED

#	Part Number	Description
12.	246-380S	Cable Support Spring, **Std.**
12a.	185-36-001	Cable Support Spring
13.	246-380	Cable Support, **Std.**
13a.	260-25-002	Cable Support
14.	285-01-001	Adaptor Support Screw
15.	B8631	Gas Hose Nipple
16.	C35-172CM	Adaptor Block, **Std.**
16a.	C35-170CM	Adaptor Block
17.	C224	O-Ring
18.	CTAK-352-C1	Gun Plug, Century
19.	CMAK-352	Gun Plug, Miller
20.	C224M	O-Ring, Miller
21.	C174M-N	Conduit Nut, Miller Plug
22.	CTAK-352-L	Gun Plug, Lincoln SP100 & SP175, Tweco
23.	CTAK-352-H	Gun Plug, Hobart Handler
24.	CTLAK-352	Gun Plug, Lincoln LN, SP150 & SP200
25.	CTAK-352-L	Gun Plug, Lincoln PowerMIG
26.	C174X-2	Adaptor Nut
27.	C174EX-1	Euro-Kwik Adaptor Assembly
28.	C174EX-1G	O-Ring, Euro
29.	C174EX-1C	Conduit Nut, Euro Kwik
30.	300-05-001	Electrical Plug, Miller/Lincoln Power MIG
31.	300-05-002	Electrical Plug, Lincoln LN, SP150 & SP200
32.	300-05-005	Electrical Plug, Century
33.	C23-40-15	Liner Assembly, 15' .023"
	C35-40-15	Liner Assembly, 15' .030"-.035", **(Std.)**
	C45-40-15	Liner Assembly, 15' .040"-.045"
	C35TF-40-10	Teflon Liner Assembly, 10' .030"-.035"
	C35TF-40-15	Teflon Liner Assembly, 15' .030"-.035"
	C45TF-40-10	Teflon Liner Assembly, 10' .040"-3/64"
	C45TF-40-15	Teflon Liner Assembly, 15' .040"-3/64"
34.	C23-40-15ST	Liner Assembly w/ Stickout, 15' .023"
	C35-40-15ST	Liner Assembly w/ Stickout, 15' .030"-.035"
	C45-40-15ST	Liner Assembly w/ Stickout, 15' .040"-.045"

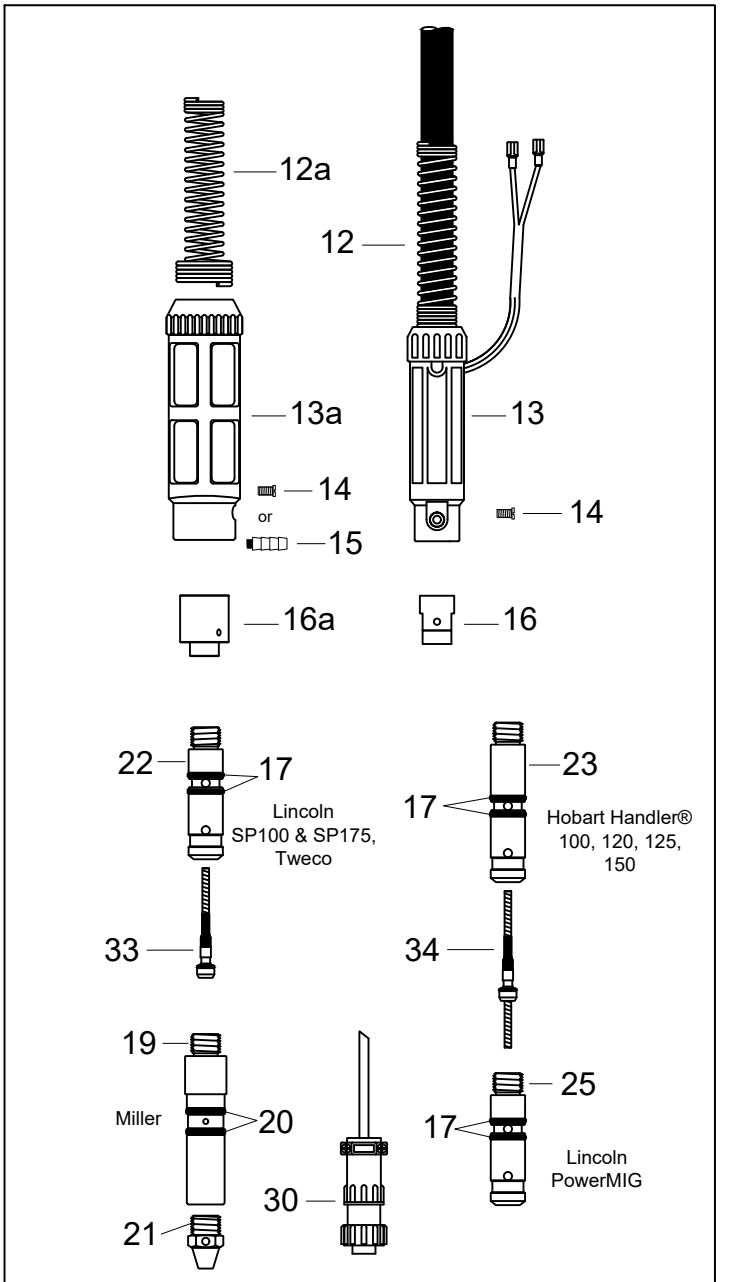

COPYRIGHT © 2025 CM INDUSTRIES, INC. ALL RIGHTS RESERVED

TWC 180

AIR-COOLED MIG GUN

Replacement Suitable for Tweco®

RATING	GUN ORDERING PART NUMBER		GUN PLUG Direct Connect
	.030"-.035"	.040"-.045"	
180 Amp CO2 @ 80% Duty Cycle **120 Amp Mixed Gas @ 80% Duty Cycle** **Wire Capacity: 0.023" (0.6mm) - 0.045" (1.2mm)**	C1xx-3035 CC1xx-3035 CX1xx-3035 CL1xx-3035 CLPM1xx-3035 CM1xx-3035	C1xx-4045 CC1xx-4045 CX1xx-4045 CL1xx-4045 CLPM1xx-4045 CM1xx-4045	**Tweco® #4** **Century®** **Euro** **Lincoln® LN** **Lincoln® W.M./Power MIG** **Miller®**
	Optional: Add "-45" for 45° Neck. Ex: CM115-3035-**45**		
	xx = Standard lengths of 10, 12, 15, 20 and 25 ft. Custom lengths also available.		

#	Part Number	Description
1.	C21-50	Nozzle, 1/2" I.D., **Std.**
	C21-50-F	Nozzle, 1/2" I.D. Flush
	C21-62	Nozzle, 5/8" I.D.
	C21-62-F	Nozzle, 5/8" I.D. Flush
	C21-62-FAS	Nozzle, Spot Nozzle
	C21-37	Nozzle, 3/8" I.D.
	C21-37-F	Nozzle, 3/8" I.D. Flush
	C21T-37	Nozzle, Tapered 3/8" I.D.
	C21T-37-F	Nozzle, Tapered 3/8" I.D. Flush
2.	C11-23	Contact Tip, .023" 0.6mm
	C11-30	Contact Tip, .030" 0.8mm
	C11-35	Contact Tip, .035" 0.9mm
	C11-40	Contact Tip, .040" 1.0mm
	C11-45	Contact Tip, .045" 1.2mm
	C11H-35	Contact Tip, H.D., .035" 0.9mm
	C11H-45	Contact Tip, H.D., .045" 1.2mm
	C11AH-364	Contact Tip, H.D., Aluminum, 3/64"
	C11T-23	Contact Tip, Tapered, .023" 0.6mm
	C11T-30	Contact Tip, Tapered, .030" 0.8mm
	C11T-35	Contact Tip, Tapered, .035" 0.9mm
	C11T-40	Contact Tip, Tapered, .040" 1.0mm
	C11T-45	Contact Tip, Tapered, .045" 1.2mm
3.	C51	Gas Diffuser, **Std.**
	C51-23	Gas Diffuser, For .023" Wire
4.	C61-45	Conductor Tube, 45°
	C61-60	Conductor Tube, 60°, **Std.**
	C61-180	Conductor Tube, 180° (Includes Items 4 & 5)
5.	C71	Repl. Conductor Tube Insulation
6.	C61R	Conductor Tube Nut
7.	C81	Handle w/ Screws, TWC 180
8.	C91	Trigger Switch w/ Blades
9.	C122FM	Binder Post & Screw
10.	C101CM	Cable Connector
11.	C44C	Replacement Set Screw
12.	C244DS	Control Wire Terminal
13.	C141-6S	Power Cable Support Spring
14.	C180-10	Power Cable, 10'
	C180-12	Power Cable, 12'
	C180-15	Power Cable, 15'
	C180-20	Power Cable, 20'
	C180-25	Power Cable, 25'

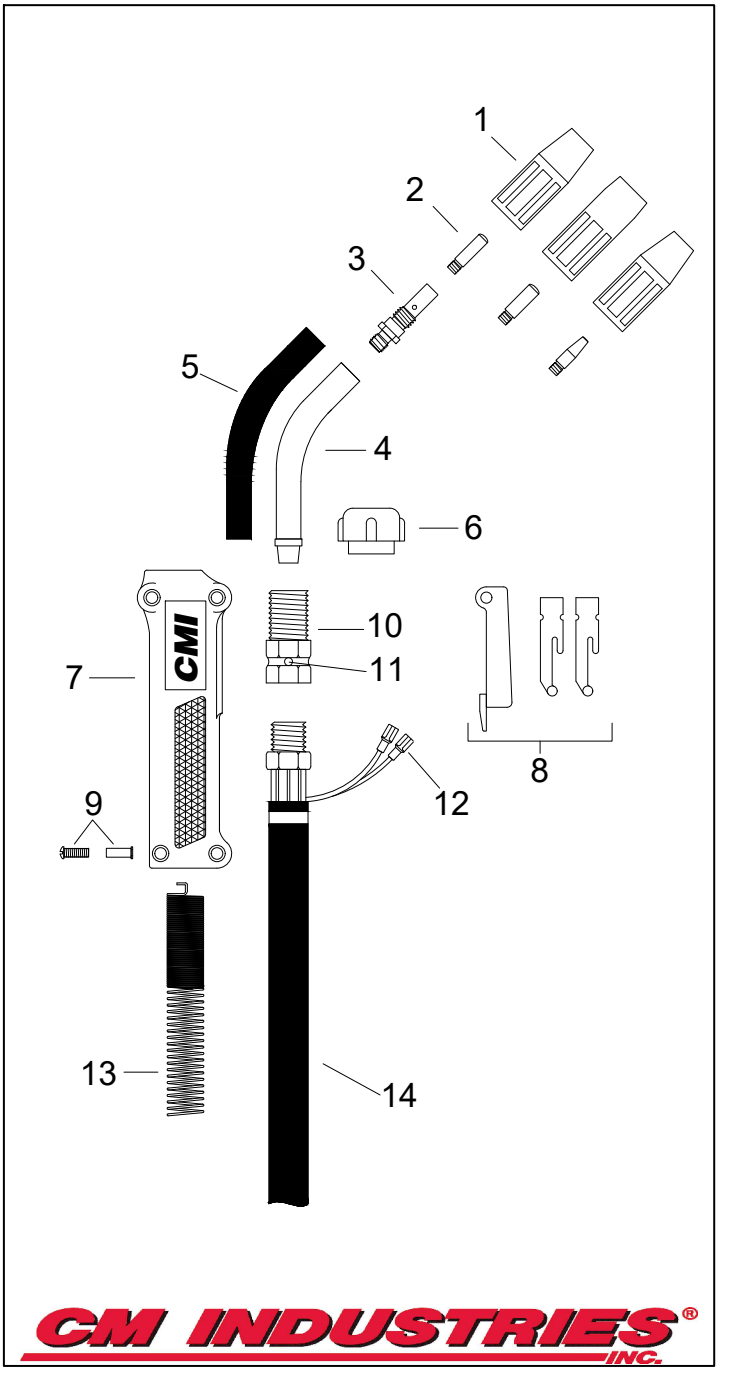

CM INDUSTRIES® INC.

COPYRIGHT © 2025 CM INDUSTRIES, INC. ALL RIGHTS RESERVED

#	Part Number	Description
15.	185-36-001	Cable Support Spring
16.	260-01-M25	Cable Support, Miller & Lincoln
16a.	CM6RC	Round Connector Case w/ Tabs, Tweco
17.	C350-174H	Gun Plug, Tweco
18.	C224	O-Ring
19.	C44C	Set Screw
20.	C350-174LPMH	Gun Plug, Lincoln PM, LF, & Powerfeed
21.	C350-174MH	Gun Plug, Miller
22.	C174M-N	Conduit Nut, Miller
23.	C350-174LH	Gun Plug, Lincoln
24.	B8631	Gas Hose Nipple
25.	300-05-001	Electrical Plug, Miller & Lincoln Power MIG
26.	300-05-002	Electrical Plug, Lincoln LN, LF, & PowerFeed
27.	C200-10E	Euro Power Cable, 10'
	C200-12E	Euro Power Cable, 12'
	C200-15E	Euro Power Cable, 15'
	C200-20E	Euro Power Cable, 20'
	C200-25E	Euro Power Cable, 25'
28.	185-36-001	Cable Support Spring
29.	260-25-002	Adaptor Support, Euro
30.	285-01-001	Adaptor Support Screw
31.	290-01-012	Hex Nut, M12
32.	300-05-010	Male Terminal
33.	401-00-001	Adaptor Nut
34.	C174EX-1	Euro-Kwik Adaptor Assembly
35.	C174EX-1G	Repl. O-Ring, Euro
36.	C174EX-1C	Repl. Conduit Nut, Euro-Kwik
37.	C42-23-15	Liner Assembly, 15', .023"
	C42-3035-15	Liner Assembly, 15', .030"-.035"
	C42-3035-25	Liner Assembly, 25', .030"-.035"
	C42-4045-15	Liner Assembly, 15', .035"-.045"
	C42-4045-25	Liner Assembly, 25', .035"-.045"
	C42N-3545-15	Nylon Liner Assembly, 15', .035"-.045"

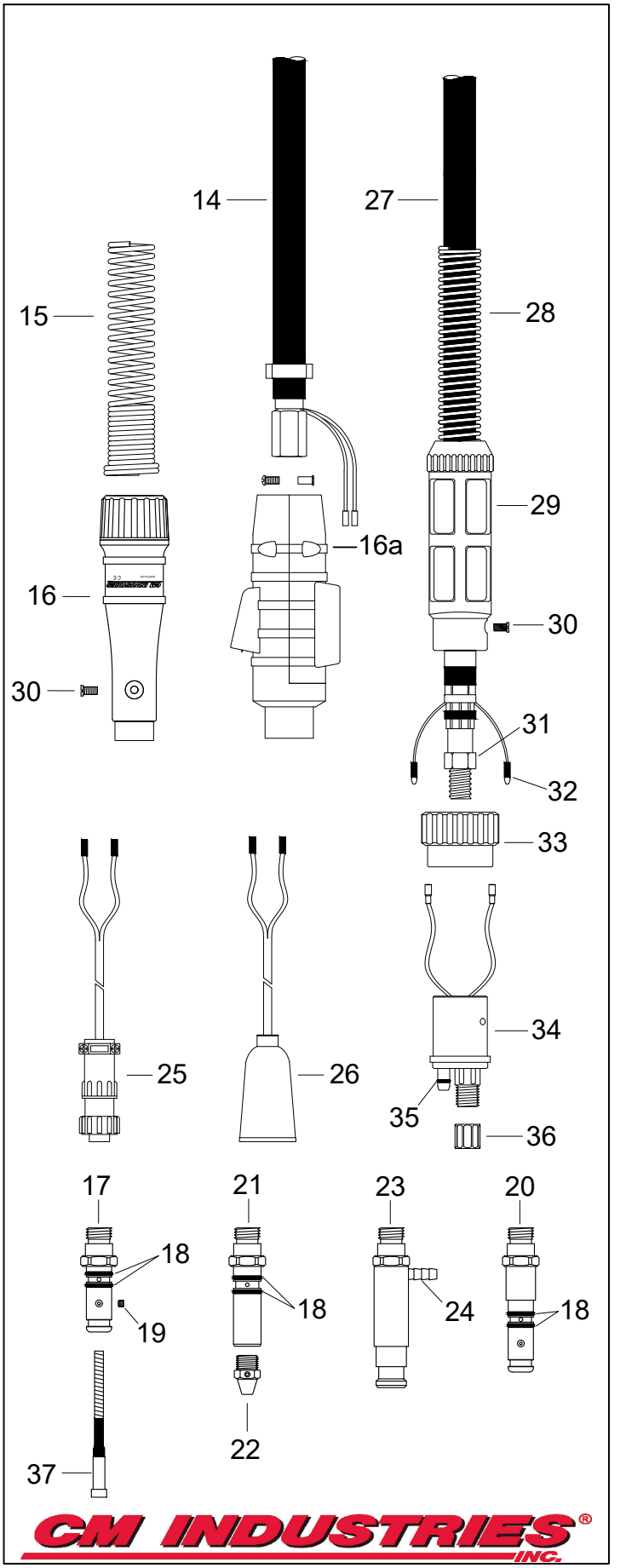

COPYRIGHT © 2025 CM INDUSTRIES, INC. ALL RIGHTS RESERVED

TWC 200

AIR-COOLED MIG GUN

Replacement Suitable for Tweco®

RATING	GUN ORDERING PART NUMBER		GUN PLUG Direct Connect
	.035"	.045"	
200 Amp CO2 @ 80% Duty Cycle **150 Amp Mixed Gas @ 80% Duty Cycle** **Wire Capacity: 0.023" (0.6mm) - 0.045" (1.2mm)**	C2xx-3035	C2xx-4045	**Tweco® #4**
	CX2xx-3035	CX2xx-4045	**Euro**
	CH2xx-3035	CH2xx-4045	**Hobart®**
	CL2xx-3035	CL2xx-4045	**Lincoln® LN**
	CLPM2xx-3035	CLPM2xx-4045	**Lincoln® W.M. / Power MIG**
	CM2xx-3035	CM2xx-4045	**Miller®**
	Optional: Add "-45" for 45° Neck. Ex: CM215-3035-**45**		
	xx = Standard lengths of 10, 12, 15, 20 and 25 ft. Custom lengths also available.		

#	Part Number	Description
1.	C22-37	Nozzle, 3/8" I.D. Adjustable
	C22-50	Nozzle, 1/2" I.D. Adjustable, **Std.**
	C22-62	Nozzle, 5/8" I.D. Adjustable
	C22-37-SS	Nozzle, 3/8" I.D. Short Stop
	C22-50-SS	Nozzle, 1/2" I.D. Short Stop
	C22-62-SS	Nozzle, 5/8" I.D. Short Stop
	C22T-37-SS	Nozzle, Tapered, 3/8" I.D. Short Stop
1a.	C23-37	Nozzle, Self Insulated, 3/8" I.D.
	C23-50	Nozzle, Self Insulated, 1/2" I.D.
	C23-62	Nozzle, Self Insulated, 5/8" I.D.
	C23-75	Nozzle, Self Insulated, 3/4" I.D.
	C23T-37	Nozzle, Tapered, Self Insulated, 3/8" I.D.
1b.	C24CT-37-S	Nozzle, Coarse Thread, 3/8" I.D.
	C24CT-50-S	Nozzle, Coarse Thread, 1/2" I.D.
	C24CT-62-S	Nozzle, Coarse Thread, 5/8" I.D.
	C24CT-75-S	Nozzle, Coarse Thread, 3/4" I.D.
2.	C14-23	Contact Tip, .023" 0.6mm
	C14-30	Contact Tip, .030" 0.8mm
	C14-35	Contact Tip, .035" 0.9mm
	C14-40	Contact Tip, .040" 1.0mm
	C14-45	Contact Tip, .045" 1.2mm
	C14A-364	Contact Tip, Aluminum, 3/64"
	C14H-35	Contact Tip, H.D., .035" 0.9mm
	C14H-40	Contact Tip, H.D., .040" 1.0mm
	C14H-45	Contact Tip, H.D., .045" 1.2mm
	C14AH-364	Contact Tip, H.D., Aluminum, 3/64"
	C14T-23	Contact Tip, Tapered, .023" 0.6mm
	C14T-30	Contact Tip, Tapered, .030" 0.8mm
	C14T-35	Contact Tip, Tapered, .035" 0.9mm
	C14T-40	Contact Tip, Tapered, .040" 1.0mm
	C14T-45	Contact Tip, Tapered, .045" 1.2mm
3.	C32	Nozzle Insulator *(Use w/ C22A's)*, **Std.**
4.	C52	Gas Diffuser, **Std.**
5.	C52FN	Gas Diffuser for Fixed Nozzles *(C23's)*
6.	C34CT	Nozzle Insulator *(Use w/ C24CT's)*
7.	C62J-45	Conductor Tube, Jacketed, 45°, 200A
	C62J-60	Conductor Tube, Jacketed, 60°, 200A, **Std.**
8.	C152	Gun Hanger
9.	C122FM	Binder Screw & Post
10.	C83	Handle Assy. w/ Posts & Screws
11.	C92	Trigger Switch Assembly
11a.	C92C	Repl. Trigger Blades

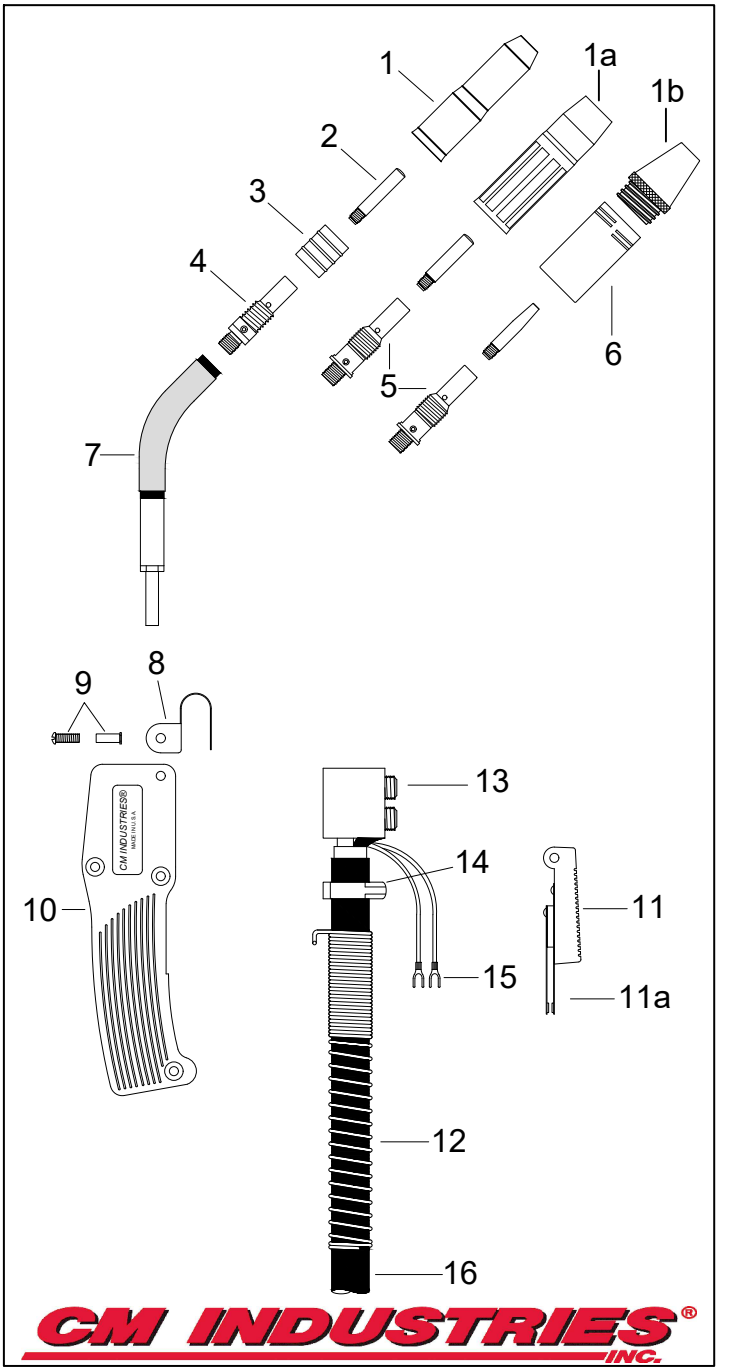

COPYRIGHT © 2025 CM INDUSTRIES, INC. ALL RIGHTS RESERVED

#	Part Number	Description
12.	C142-6S	Cable Support Spring
13.	C102	Cable Connetor Block Assembly
14.	C134-16	Power Cable Clamp
15.	C244	Control Wire Terminal
16.	C200-10	Power Cable, 10'
	C200-12	Power Cable, 12'
	C200-15	Power Cable, 15'
	C200-20	Power Cable, 20'
	C200-25	Power Cable, 25'
17.	C350R-230-10S	Cable Support Spring
18.	CR6RC	Round Connector Case, Miller & Lincoln
18a.	CM6RC	Round Connector Case w/ Tabs, Tweco
19.	C350-174H	Gun Plug, Tweco #4
20.	C224	Repl. O-Ring
21.	C44C	Set Screw
22.	C350-174LPMH	Gun Plug, Lincoln PM, LF, & Powerfeed
23.	C350-174MH	Gun Plug, Miller
24.	C174M-N	Conduit Nut, Miller
25.	C350-174LH	Gun Plug, Lincoln LN
26.	B8631	Repl. Gas Hose Nipple
27.	300-05-001	Electrical Plug, Miller & Lincoln Power MIG
28.	300-05-002	Electrical Plug, Lincoln LN, LF, & PowerFeed
29.	C200-10E	Euro Power Cable, 10'
	C200-12E	Euro Power Cable, 12'
	C200-15E	Euro Power Cable, 15'
	C200-20E	Euro Power Cable, 20'
	C200-25E	Euro Power Cable, 25'
30.	185-26-001	Cable Support Spring
31.	260-25-002	Adaptor Support, Euro
32.	285-01-001	Adaptor Support Screw
33.	290-01-012	Hex Nut, M12
34.	300-05-010	Male Terminal
35.	401-00-001	Adaptor Nut
36.	C174EX-1	Euro-Kwik Adaptor Assembly
37.	C174EX-1G	Repl. O-Ring, Euro
38.	C174EX-1C	Repl. Conduit Nut, Euro-Kwik
39.	C42-23-15	Liner Assembly, 15', .023"
	C42-3035-15	Liner Assembly, 15', .030"-.035"
	C42-3035-25	Liner Assembly, 25', .030"-.035"
	C42-4045-15	Liner Assembly, 15', .035"-.045"
	C42-4045-25	Liner Assembly, 25', .035"-.045"
	C42N-3545-15	Nylon Liner Assembly, 15', .035"-.045"

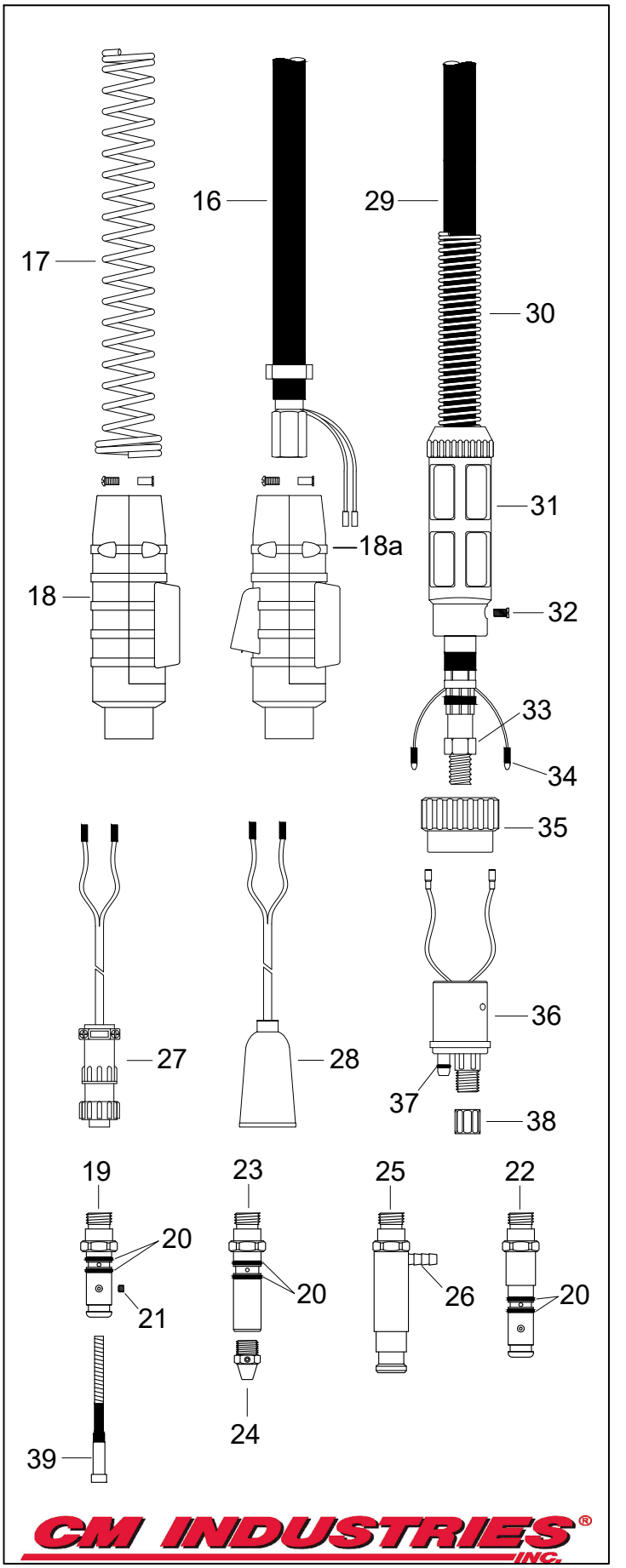

COPYRIGHT © 2025 CM INDUSTRIES, INC. ALL RIGHTS RESERVED

TWC 250

AIR-COOLED MIG GUN

Replacement Suitable for Tweco®

RATING	GUN ORDERING PART NUMBER		GUN PLUG Direct Connect
	.035"	.045"	
250 Amp CO2 @ 80% Duty Cycle **200 Amp Mixed Gas @ 80% Duty Cycle** **Wire Capacity: 0.023" (0.6mm) - 0.045" (1.2mm)**	C250-3545-xx	C250-4045-xx	**Tweco® #4**
	CX250-3545-xx	CX250-4045-xx	**Euro**
	CH250-3545-xx	CH250-4045-xx	**Hobart®**
	CL250-3545-xx	CL250-4045-xx	**Lincoln® LN**
	CLPM250-3545-xx	CLPM250-4045-xx	**Lincoln® W.M. / Power MIG**
	CM250-3545-xx	CM250-4045-xx	**Miller®**
	Optional: Add "-45" for 45° Neck. Ex: CM250-3545-15-**45**		
	xx = Standard lengths of 10, 12, 15, 20 and 25 ft. Custom lengths also available.		

#	Part Number	Description
1.	C22-37	Nozzle, 3/8" I.D. Adjustable
	C22-50	Nozzle, 1/2" I.D. Adjustable, **Std.**
	C22-62	Nozzle, 5/8" I.D. Adjustable
	C22-37-SS	Nozzle, 3/8" I.D. Short Stop
	C22-50-SS	Nozzle, 1/2" I.D. Short Stop
	C22-62-SS	Nozzle, 5/8" I.D. Short Stop
	C22T-37-SS	Nozzle, Tapered, 3/8" I.D. Short Stop
1a.	C23-37	Nozzle, Self Insulated, 3/8" I.D.
	C23-50	Nozzle, Self Insulated, 1/2" I.D.
	C23-62	Nozzle, Self Insulated, 5/8" I.D.
	C23-75	Nozzle, Self Insulated, 3/4" I.D.
	C23T-37	Nozzle, Tapered, Self Insulated, 3/8" I.D.
1b.	C24CT-37-S	Nozzle, Coarse Thread, 3/8" I.D.
	C24CT-50-S	Nozzle, Coarse Thread, 1/2" I.D.
	C24CT-62-S	Nozzle, Coarse Thread, 5/8" I.D.
	C24CT-75-S	Nozzle, Coarse Thread, 3/4" I.D.
2.	C14-23	Contact Tip, .023" 0.6mm
	C14-30	Contact Tip, .030" 0.8mm
	C14-35	Contact Tip, .035" 0.9mm
	C14-40	Contact Tip, .040" 1.0mm
	C14-45	Contact Tip, .045" 1.2mm
	C14A-364	Contact Tip, Aluminum, 3/64"
	C14H-35	Contact Tip, H.D., .035" 0.9mm
	C14H-40	Contact Tip, H.D., .040" 1.0mm
	C14H-45	Contact Tip, H.D., .045" 1.2mm
	C14AH-364	Contact Tip, H.D., Aluminum, 3/64"
	C14T-23	Contact Tip, Tapered, .023" 0.6mm
	C14T-30	Contact Tip, Tapered, .030" 0.8mm
	C14T-35	Contact Tip, Tapered, .035" 0.9mm
	C14T-40	Contact Tip, Tapered, .040" 1.0mm
	C14T-45	Contact Tip, Tapered, .045" 1.2mm
3.	C32	Nozzle Insulator *(Use w/ C22A's)*, **Std.**
4.	C52	Gas Diffuser, **Std.**
5.	C52FN	Gas Diffuser for Fixed Nozzles *(C23's)*
6.	C34CT	Nozzle Insulator *(Use w/ C24CT's)*
7.	C62J-45HD	Conductor Tube, Jacketed, 45°, 250A
	C62J-60HD	Conductor Tube, Jacketed, 60°, 250A, **Std.**
8.	C152	Gun Hanger
9.	C122FM	Binder Screw & Post
10.	C83	Handle Assy. w/ Posts & Screws
11.	C92	Trigger Switch Assembly
11a.	C92C	Repl. Trigger Blades

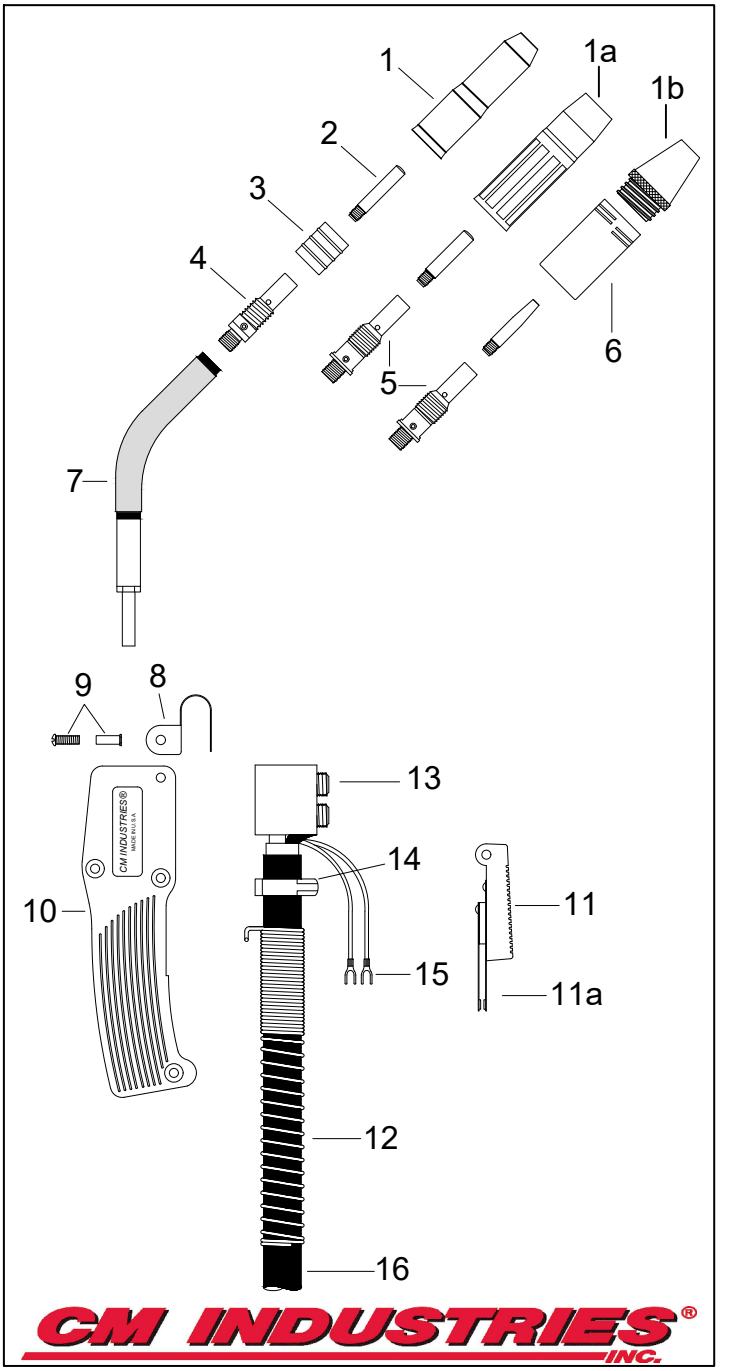

COPYRIGHT © 2025 CM INDUSTRIES, INC. ALL RIGHTS RESERVED

#	Part Number	Description
12.	C142-6S	Cable Support Spring
13.	C102	Cable Connetor Block Assembly
14.	C134-16	Power Cable Clamp
15.	C244	Control Wire Terminal
16.	C200-10	Power Cable, 10'
	C200-12	Power Cable, 12'
	C200-15	Power Cable, 15'
	C200-20	Power Cable, 20'
	C200-25	Power Cable, 25'
17.	C350R-230-10S	Cable Support Spring
18.	CR6RC	Round Connector Case, Miller & Lincoln
18a.	CM6RC	Round Connector Case w/ Tabs, Tweco
19.	C350-174H	Gun Plug, Tweco #4
20.	C224	Repl. O-Ring
21.	C44C	Set Screw
22.	C350-174LPMH	Gun Plug, Lincoln PM, LF, & Powerfeed
23.	C350-174MH	Gun Plug, Miller
24.	C174M-N	Conduit Nut, Miller
25.	C350-174LH	Gun Plug, Lincoln LN
26.	B8631	Repl. Gas Hose Nipple
27.	300-05-001	Electrical Plug, Miller & Lincoln Power MIG
28.	300-05-002	Electrical Plug, Lincoln LN, LF, & PowerFeed
29.	C200-10E	Euro Power Cable, 10'
	C200-12E	Euro Power Cable, 12'
	C200-15E	Euro Power Cable, 15'
	C200-20E	Euro Power Cable, 20'
	C200-25E	Euro Power Cable, 25'
30.	185-26-001	Cable Support Spring
31.	260-25-002	Adaptor Support, Euro
32.	285-01-001	Adaptor Support Screw
33.	290-01-012	Hex Nut, M12
34.	300-05-010	Male Terminal
35.	401-00-001	Adaptor Nut
36.	C174EX-1	Euro-Kwik Adaptor Assembly
37.	C174EX-1G	Repl. O-Ring, Euro
38.	C174EX-1C	Repl. Conduit Nut, Euro-Kwik
39.	C42-23-15	Liner Assembly, 15', .023"
	C42-3035-15	Liner Assembly, 15', .030"-.035"
	C42-3035-25	Liner Assembly, 25', .030"-.035"
	C42-4045-15	Liner Assembly, 15', .035"-.045"
	C42-4045-25	Liner Assembly, 25', .035"-.045"
	C42N-3545-15	Nylon Liner Assembly, 15', .035"-.045"

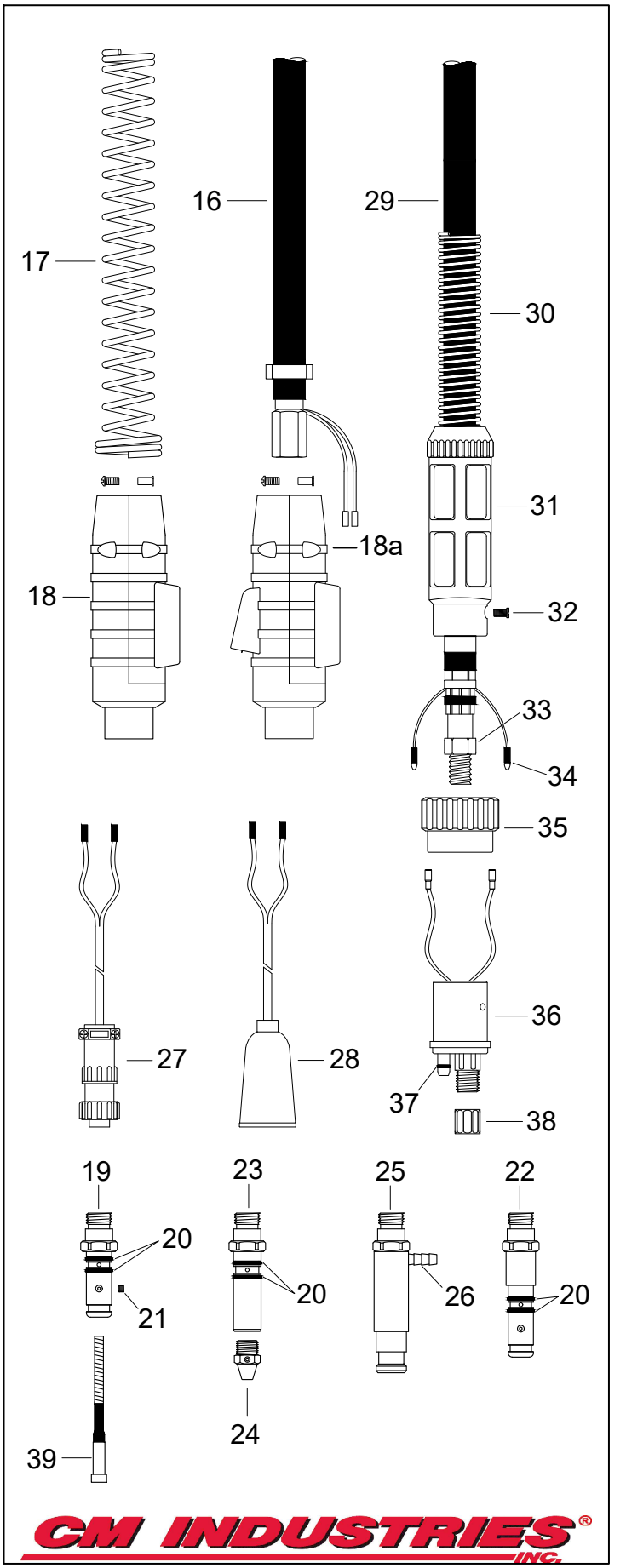

COPYRIGHT © 2025 CM INDUSTRIES, INC. ALL RIGHTS RESERVED

250 AMP HD AIR-COOLED MIG GUN

Replacement Suitable for Profax®

RATING	GUN ORDERING PART NUMBER		GUN PLUG Direct Connect
	.030"-.035"	.040"-.045"	
250 Amp CO2 @ 80% Duty Cycle **Wire Capacity: 0.030" (0.6mm) - 0.052" (1.2mm)**	HD250-3035-xx HDX250-3035-xx HDLN250-3035-xx HDLF250-3035-xx HDLP250-3035-xx HDM250-3035-xx	HD250-4045-xx HDX250-4045-xx HDLN250-4045-xx HDLF250-4045-xx HDLP250-4045-xx HDM250-4045-xx	**Tweco® #4** **Euro** **Lincoln® LN** **Lincoln® LF & Power Feed** **Lincoln® W.M. / Power MIG** **Miller®**
	Optional: Add "-60" for 60° Neck. Ex: HDM250-3035-15-**60**		
	xx = Standard lengths of 10, 12, 15, 20 and 25 ft. Custom lengths also available.		

#	Part Number	Description
1.	27S50	H.D. Nozzle, 1/2" I.D.
	27S62	H.D. Nozzle, 5/8" I.D.
	27S75	H.D. Nozzle, 3/4" I.D.
	27T38	Tapered Nozzle, 3/8" I.D., Brass *(For SLT Tips)*
	27TC38	Tapered Nozzle, 3/8" I.D. *(For 17SLT Tips)*
	27T50	Nozzle, 1/2" I.D., Bottle Neck
	27K50	M.D. Nozzle, 1/2" I.D.
	27K62	M.D. Nozzle, 5/8" I.D., **Std.**
2.	17ST-30	Contact Tip .030" Tapered
	17ST-35	Contact Tip .035" Tapered
	17ST-45	Contact Tip .045" Tapered
	17ST-52	Contact Tip .052" Tapered
	16ST-30	Contact Tip .030" Tapered
	16ST-35	Contact Tip .035" Tapered
	16ST-45	Contact Tip .045" Tapered
	16ST-52	Contact Tip .052" Tapered
2a.	17SLT-35	Contact Tip .035" Long Taper
	17SLT-45	Contact Tip .045" Long Taper
	17SLT-52	Contact Tip .052" Long Taper
2b.	17S-30	Contact Tip .030" } **Std.**
	17S-35	Contact Tip .035"
	17S-45	Contact Tip .045"
	17AS-364	Contact Tip 3/64"
	17S-52	Contact Tip .052"
	16S-30	Contact Tip .030"
	16S-35	Contact Tip .035"
	16S-45	Contact Tip .045"
	16AS-364	Contact Tip 3/64"
	16S-52	Contact Tip .052"
3.	52HD	Gas Diffuser
4.	17SW	H.D. Shock Washer
5.	63-30HDJ	Jacketed Gooseneck, 30°
	63-45HDJ	Jacketed Gooseneck, 45°, **Std.**
	63-60HDJ	Jacketed Gooseneck, 60°
	63-180HDJ	Jacketed Gooseneck, 180°
6.	C152	Gun Hanger
7.	C122FM	Binder Screw & Post
8.	C83	Handle Assy. w/ Posts & Screws
9.	C92	Trigger Switch Assembly
9a.	C92C	Repl. Trigger Blades
10.	C142-6S	Cable Support Spring
11.	C102	Cable Connetor Block Assembly
12.	C134-16	Power Cable Clamp
13.	C244	Control Wire Terminal

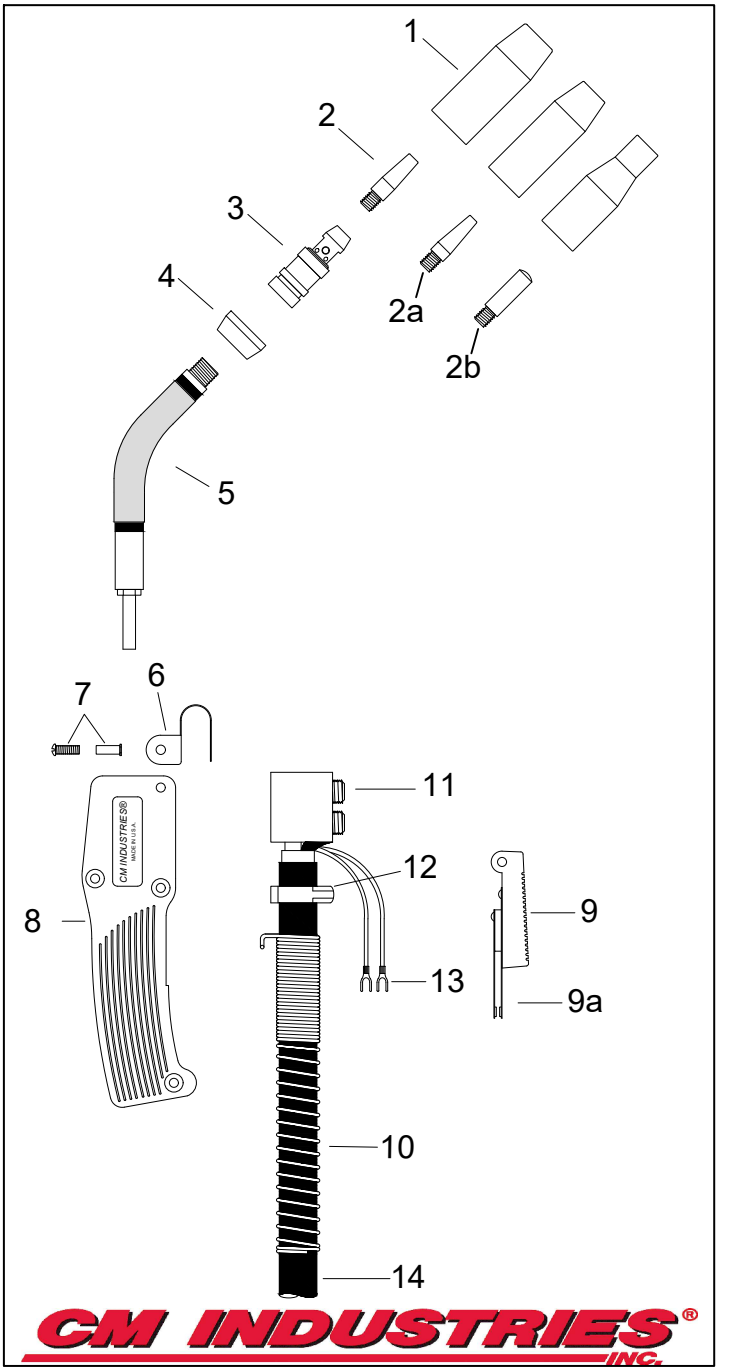

COPYRIGHT © 2025 CM INDUSTRIES, INC. ALL RIGHTS RESERVED

#	Part Number	Description
14.	C200-10CM	Power Cable, 10'
	C200-12CM	Power Cable, 12'
	C200-15CM	Power Cable, 15'
	C200-20CM	Power Cable, 20'
	C200-25CM	Power Cable, 25'
15.	C350R-230-10S	Cable Support Spring
16.	CR6RC	Round Connector Case, Miller & Lincoln
16a.	CM6RC	Round Connector Case w/ Tabs, Tweco
17.	C350-174H	Gun Plug, Tweco
18.	C224	O-Ring
19.	C44C	Set Screw
20.	C350-174LPMH	Gun Plug, Lincoln PM, LF, & Power Feed
21.	C350-174MH	Gun Plug, Miller
22.	C174M-N	Conduit Nut, Miller
23.	C350-174LH	Gun Plug, Lincoln LN
24.	B8631	Gas Hose Nipple
25.	300-05-001	Electrical Plug, Miller & Lincoln Power MIG
26.	300-05-002	Electrical Plug, Lincoln LN, LF, & PowerFeed
27.	C200-10E	Euro Power Cable, 10'
	C200-12E	Euro Power Cable, 12'
	C200-15E	Euro Power Cable, 15'
	C200-20E	Euro Power Cable, 20'
	C200-25E	Euro Power Cable, 25'
28.	185-36-001	Cable Support Spring
29.	260-25-002	Adaptor Support, Euro
30.	285-01-001	Adaptor Support Screw
31.	290-01-012	Hex Nut, M12
32.	300-05-010	Male Terminal
33.	401-00-001	Adaptor Nut
34.	C174EX-1	Euro-Kwik Adaptor Assembly
35.	C174EX-1G	Repl. O-Ring, Euro
36.	C174EX-1C	Repl. Conduit Nut, Euro-Kwik
37.	C42-23-15	Liner Assembly, 15', .023"
	C42-3035-15	Liner Assembly, 15', .030"-.035"
	C42-3035-25	Liner Assembly, 25', .030"-.035"
	C42-4045-15	Liner Assembly, 15', .040"-.045"
	C42-4045-25	Liner Assembly, 25', .040"-.045"
	C42-116-15	Liner Assembly, 15', .052"-1/16"
	C42-116-25	Liner Assembly, 25', .052"-1/16"
	C42N-3545-15	Nylon Liner Assembly, 15', .035"-.045"

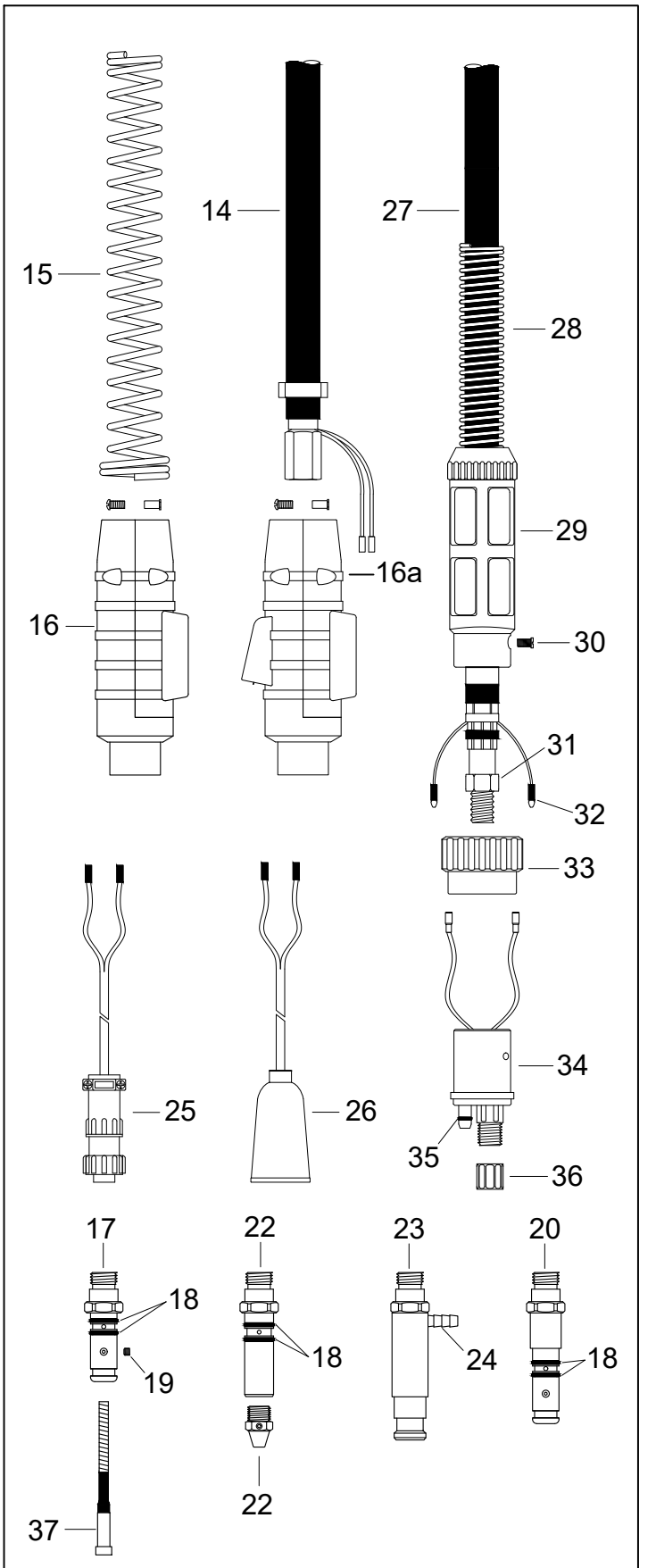

COPYRIGHT © 2025 CM INDUSTRIES, INC. ALL RIGHTS RESERVED

TWC 250SM

AIR-COOLED MIG GUN

Replacement Suitable for Tweco®

RATING	GUN ORDERING PART NUMBER		GUN PLUG Direct Connect
	.035"	.045"	
250 Amp CO2 @ 80% Duty Cycle **200 Amp Mixed Gas @ 80% Duty Cycle** **Wire Capacity: .023" (0.6mm) - .045" (1.2mm)**	CMS250-35-xx	CMS250-45-xx	**Tweco® #4**
	CMS250X-35-xx	CMS250X-45-xx	**Euro**
	CMS250L-35-xx	CMS250L-45-xx	**Lincoln® LN**
	CMS250LF-35-xx	CMS250LF-45-xx	**Lincoln® LF / Power Feed**
	CMS250PM-35-xx	CMS250PM-45-xx	**Lincoln® Power MIG**
	CMS250M-35-xx	CMS250M-45-xx	**Miller®**
	xx = Standard lengths of 10, 12, 15, 20 and 25 ft. Custom lengths also available.		

#	Part Number	Description
1.	C22-37	Nozzle, 3/8" I.D. Adjustable
	C22-50	Nozzle, 1/2" I.D. Adjustable, **Std.**
	C22-62	Nozzle, 5/8" I.D. Adjustable
	C22-37-SS	Nozzle, 3/8" I.D. Short Stop
	C22-50-SS	Nozzle, 1/2" I.D. Short Stop
	C22-62-SS	Nozzle, 5/8" I.D. Short Stop
	C22T-37-SS	Nozzle, Tapered, 3/8" I.D. Short Stop
1a.	C23-37	Nozzle, Self Insulated, 3/8" I.D.
	C23-50	Nozzle, Self Insulated, 1/2" I.D.
	C23-62	Nozzle, Self Insulated, 5/8" I.D.
	C23-75	Nozzle, Self Insulated, 3/4" I.D.
	C23T-37	Nozzle, Tapered, Self Insulated, 3/8" I.D.
1b.	C24CT-37-S	Nozzle, Coarse Thread, 3/8" I.D.
	C24CT-50-S	Nozzle, Coarse Thread, 1/2" I.D.
	C24CT-62-S	Nozzle, Coarse Thread, 5/8" I.D.
	C24CT-75-S	Nozzle, Coarse Thread, 3/4" I.D.
2.	C14-23	Contact Tip, .023" 0.6mm
	C14-30	Contact Tip, .030" 0.8mm
	C14-35	Contact Tip, .035" 0.9mm, **Std.**
	C14-40	Contact Tip, .040" 1.0mm
	C14-45	Contact Tip, .045" 1.2mm
	C14A-364	Contact Tip, Aluminum, 3/64"
	C14H-35	Contact Tip, H.D., .035" 0.9mm
	C14H-40	Contact Tip, H.D., .040" 1.0mm
	C14H-45	Contact Tip, H.D., .045" 1.2mm
	C14AH-364	Contact Tip, H.D., Aluminum, 3/64"
	C14T-23	Contact Tip, Tapered, .023" 0.6mm
	C14T-30	Contact Tip, Tapered, .030" 0.8mm
	C14T-35	Contact Tip, Tapered, .035" 0.9mm
	C14T-40	Contact Tip, Tapered, .040" 1.0mm
	C14T-45	Contact Tip, Tapered, .045" 1.2mm
3.	C32	Nozzle Insulator *(Use w/ C24A's)*, **Std.**
4.	C52	Gas Diffuser, **Std.**
5.	C52FN	Gas Diffuser for Fixed Nozzles *(C23's - C24's)*
6.	C34CT	Nozzle Insulator *(Use w/ C24CT's)*
7.	CMS62J-60	Conductor Tube, Jacketed, 60°, 250A
8.	C152	Gun Hanger
9.	CMS84	Handle Assembly w/ Posts & Screws
10.	CELC94BL	Trigger Switch Blades
11.	CELC94	Trigger
12.	185-36-001	Cable Support Spring

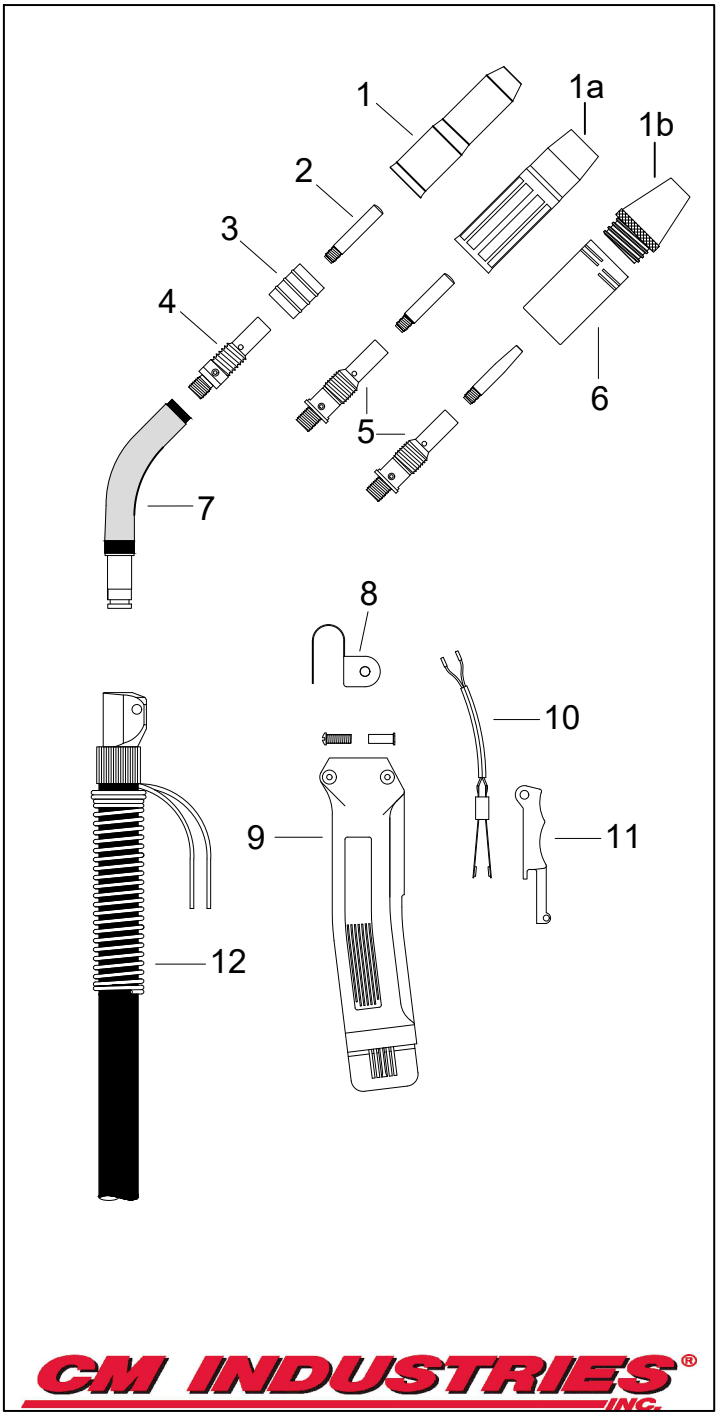

CM INDUSTRIES® INC.

COPYRIGHT © 2025 CM INDUSTRIES, INC. ALL RIGHTS RESERVED

#	Part Number	Description
13.	C350R-230-10S	Cable Support Spring
14.	CR6RC	Round Connector Case, Miller & Lincoln
14a.	CM6RC	Round Connector Case w/ Tabs, Tweco
15.	C350-174H	Gun Plug, Tweco
16.	C224	O-Ring
17.	C44C	Set Screw
18.	C350-174LPMH	Gun Plug, Lincoln PM, LF, & Power Feed
19.	C350-174MH	Gun Plug, Miller
20.	C174M-N	Conduit Nut, Miller
21.	C350-174LH	Gun Plug, Lincoln
22.	B8631	Gas Hose Nipple
23.	300-05-001	Electrical Plug, Miller & Lincoln Power MIG
24.	300-05-002	Electrical Plug, Lincoln LN, LF, & Power Feed
25.	185-36-001	Cable Support Spring
26.	260-25-002	Adaptor Support, Euro
27.	285-01-001	Adaptor Support Screw
28.	290-01-012	Hex Nut, M12
29.	300-05-010	Male Terminal
30.	401-00-001	Adaptor Nut
31.	C174EX-1	Euro-Kwik Adaptor Assembly
32.	C174EX-1G	Repl. O-Ring, Euro
33.	C174EX-1C	Repl. Conduit Nut, Euro-Kwik
34.	C42-23-15	Liner Assembly, 15', .023"
	C42-3035-15 C42-3035-25	Liner Assembly, 15', .030"-.035" Liner Assembly, 25', .030"-.035"
	C42-4045-15 C42-4045-25	Liner Assembly, 15', .035"-.045", **Std.** Liner Assembly, 25', .035"-.045"
	C42N-3545-15	Nylon Liner Assembly, 15', .035"-.045"

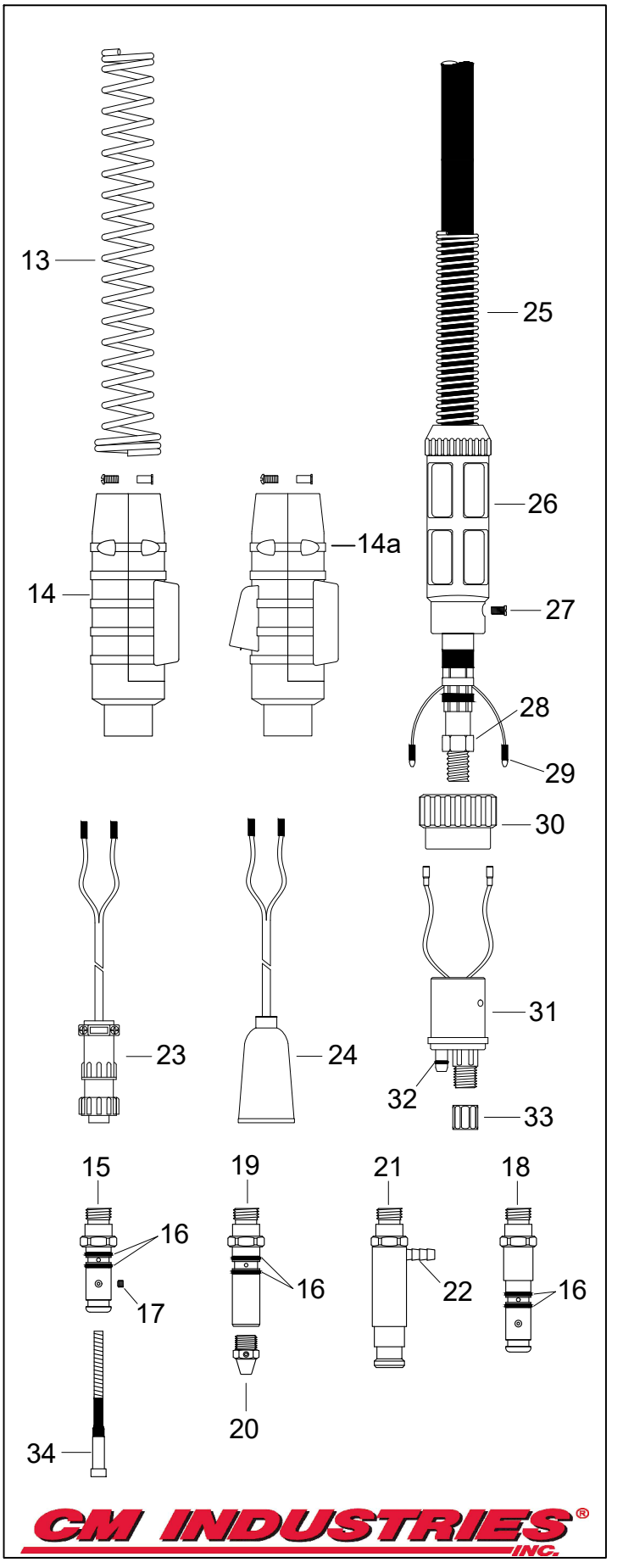

COPYRIGHT © 2025 CM INDUSTRIES, INC. ALL RIGHTS RESERVED

TWC 300

AIR-COOLED MIG GUN

Replacement Suitable for Tweco®

RATING	GUN ORDERING PART NUMBER		GUN PLUG Direct Connect
	.035"-.045"	.052"-1/16"	
300 Amp CO2 @ 80% Duty Cycle 200 Amp Mixed Gas @ 80% Duty Cycle Wire Capacity: 0.030" (0.8mm) - 1/16" (1.6mm)	C3xx-3545	C3xx-116	**Tweco® #4**
	CX3xx-3545	CX3xx-116	**Euro**
	CH3xx-3545	CH3xx-116	**Hobart®**
	CL3xx-3545	CL3xx-116	**Lincoln® LN**
	CLPM3xx-3545	CLPM3xx-116	**Lincoln® W.M. / Power MIG**
	CLF3xx-3545	CLF3xx-116	**Lincoln® LF / Power Feed**
	CM3xx-3545	CM3xx-116	**Miller®**
	Optional: Add "-45" for 45° Neck. Ex: CM315-3545-**45**		
	xx = Standard lengths of 10, 12, 15, 20 and 25 ft. Custom lengths also available.		

#	Part Number	Description
1.	C24A-50	Nozzle, 1/2" I.D. Adjustable
	C24A-62	Nozzle, 5/8" I.D. Adjustable, **Std.**
	C24A-75	Nozzle, 3/4" I.D. Adjustable
	C24A-37-SS	Nozzle, 3/8" I.D. Short Stop
	C24A-50-SS	Nozzle, 1/2" I.D. Short Stop
	C24A-62-SS	Nozzle, 5/8" I.D. Short Stop
	C24A-75-SS	Nozzle, 3/4" I.D. Short Stop
	C24AT-37-SS	Nozzle, Tapered, 3/8" I.D. Short Stop
1a.	C23-37	Nozzle, Self Insulated, 3/8" I.D.
	C23-50	Nozzle, Self Insulated, 1/2" I.D.
	C23-62	Nozzle, Self Insulated, 5/8" I.D.
	C23-75	Nozzle, Self Insulated, 5/8" I.D.
	C23T-37	Nozzle, Tapered, Self Insulated, 3/8" I.D.
1b.	C24CT-37-S	Nozzle, Coarse Thread, 3/8" I.D.
	C24CT-50-S	Nozzle, Coarse Thread, 1/2" I.D.
	C24CT-62-S	Nozzle, Coarse Thread, 5/8" I.D.
	C24CT-75-S	Nozzle, Coarse Thread, 3/4" I.D.
2.	C14-30	Contact Tip, .030" 0.8mm
	C14-35	Contact Tip, .035" 0.9mm
	C14-40	Contact Tip, .040" 1.0mm
	C14-45	Contact Tip, .045" 1.2mm
	C14-52	Contact Tip, .052" 1.4mm
	C14-116	Contact Tip, 1/16" 1.6mm
	C14A-364	Contact Tip, Aluminum, 3/64"
	C14H-35	Contact Tip, H.D., .035" 0.9mm
	C14H-40	Contact Tip, H.D., .040" 1.0mm
	C14H-45	Contact Tip, H.D., .045" 1.2mm
	C14H-52	Contact Tip, H.D., .052" 1.4mm
	C14H-116	Contact Tip, H.D., 1/16" 1.6mm
	C14AH-364	Contact Tip, H.D., Aluminum, 3/64"
	C14AH-116	Contact Tip, H.D., Aluminum, 1/16"
	C14T-30	Contact Tip, Tapered, .030" 0.8mm
	C14T-35	Contact Tip, Tapered, .035" 0.9mm
	C14T-40	Contact Tip, Tapered, .040" 1.0mm
	C14T-45	Contact Tip, Tapered, .045" 1.2mm
	C14T-52	Contact Tip, Tapered, .052" 1.4mm
	C14T-116	Contact Tip, Tapered, 1/16" 1.6mm
3.	C34A	Nozzle Insulator *(Use w/ C24A's)*, **Std.**
4.	C54A	Gas Diffuser, **Std.**
5.	C34CT	Nozzle Insulator *(Use w/ C24CT's)*
6.	C63J-45	Conductor Tube, Jacketed, 45°
	C63J-60	Conductor Tube, Jacketed, 60°, **Std.**
	C63J-80	Conductor Tube, Jacketed, 80°
	C63J-180	Conductor Tube, Jacketed, 180°

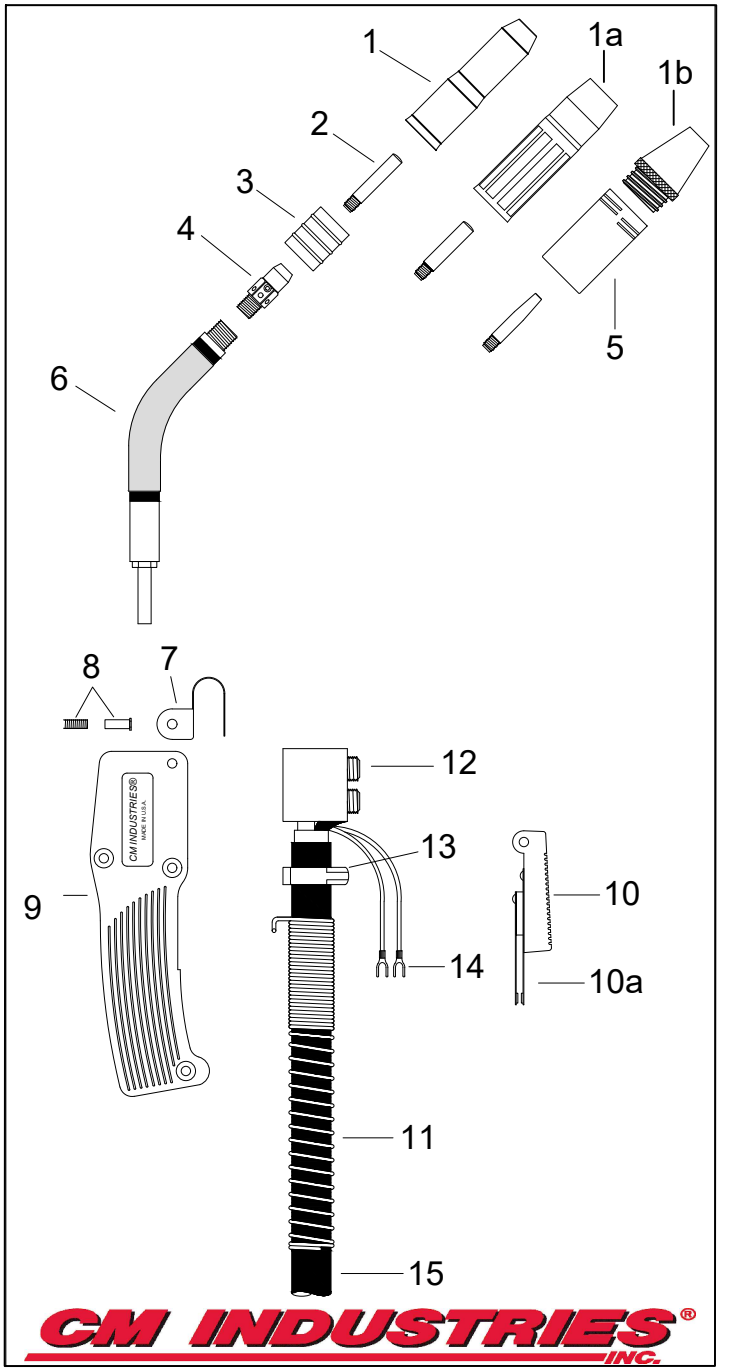

CM INDUSTRIES® INC.

COPYRIGHT © 2025 CM INDUSTRIES, INC. ALL RIGHTS RESERVED

#	Part Number	Description
7.	C152	Gun Hanger
8.	C122FM	Binder Screw & Post
9.	C83	Handle w/ Screws & Post
10.	C92	Trigger Switch Assembly
10a.	C92C	Repl. Trigger Blades
11.	C142-6S	Cable Support Spring
12.	C102	Cable Connetor Block Assembly
13.	C134-16	Power Cable Clamp
14.	C244	Control Wire Terminal
15.	C300-10	Power Cable, 10'
	C300-12	Power Cable, 12'
	C300-15	Power Cable, 15'
	C300-20	Power Cable, 20'
	C300-25	Power Cable, 25'
16.	C350R-230-10S	Cable Support Spring
17.	C104	Cable Connector Block Assembly
18.	CM170-4H	Connector Plug Adaptor
19.	CR6RC	Round Connector Case, Miller & Lincoln
19a.	CM6RC	Round Connector Case w/ Tabs, Tweco
20.	C350-174H	Gun Plug, Tweco
21.	C224	O-Ring
22.	C44C	Set Screw
23.	C350-174MH	Gun Plug, Miller
24.	C174M-N	Conduit Nut, Miller
25.	C350-174LH	Gun Plug, Lincoln LN
26.	B8631	Gas Hose Nipple
27.	C350-174LPMH	Gun Plug, Lincoln PM, LF, & Power Feed
28.	300-05-001	Electrical Plug, Miller & Lincoln Power MIG
29.	300-05-002	Electrical Plug, Lincoln LN & LF
30.	C300-10E	Euro Power Cable, 10'
	C300-12E	Euro Power Cable, 12'
	C300-15E	Euro Power Cable, 15'
	C300-20E	Euro Power Cable, 20'
	C300-25E	Euro Power Cable, 25'
31.	185-36-001	Cable Support Spring
32.	260-25-002	Adaptor Support, Euro
33.	285-01-001	Adaptor Support Screw
34.	290-01-012	Hex Nut, M12
35.	300-05-010	Male Terminal
36.	401-00-001	Adaptor Nut
37.	C174EX-1	Euro-Kwik Adaptor Assembly
38.	C174EX-1G	O-Ring, Euro
39.	C174EX-1C	Conduit Nut, Euro-Kwik
40.	C44-3545-15	Liner Assembly, 15', .035"-.045"
	C44-3545-25	Liner Assembly, 25', .035"-.045"
	C44-116-15	Liner Assembly, 15', .052"-.062"
	C44-116-25	Liner Assembly, 25', .052"-.062"
	C44N-3545-15	Nylon Liner Assembly, 15', .035"-.045"
	C44N-116-15	Nylon Liner Assembly, 15', .052"-.062"

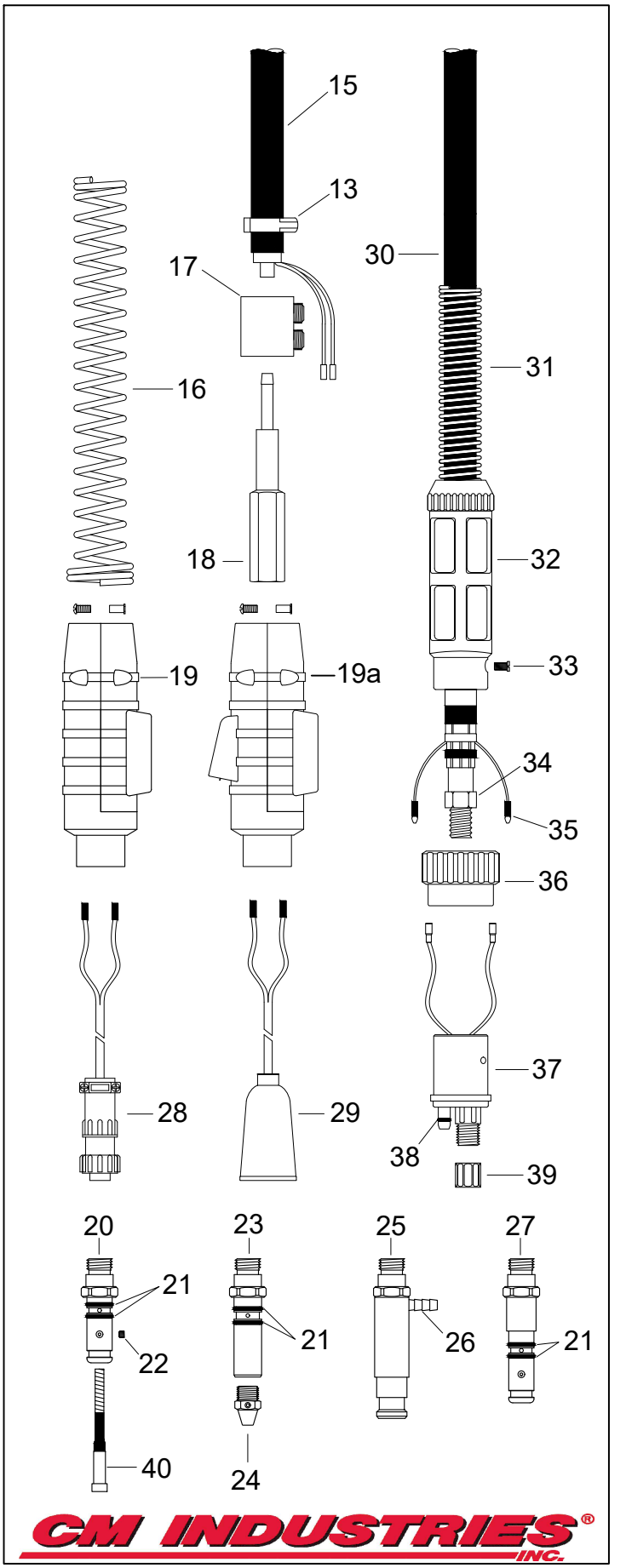

COPYRIGHT © 2025 CM INDUSTRIES, INC. ALL RIGHTS RESERVED

TWC 350SM

AIR-COOLED MIG GUN

Replacement Suitable for Tweco®

RATING	GUN ORDERING PART NUMBER		GUN PLUG Direct Connect
	.035"-.045"	.052"-1/16"	
350 Amp CO2 @ 80% Duty Cycle **275 Amp Mixed Gas @ 80% Duty Cycle** **Wire Capacity: 0.035" (0.9mm) - 5/64" (2.0mm)**	CMS3xx-45	CMS3xx-116	**Tweco® #4**
	CMS3xxX-45	CMS3xxX-116	**Euro**
	CMS3xxL-45	CMS3xxL-116	**Lincoln® LN**
	CMS3xxLF-45	CMS3xxLF-116	**Lincoln® LF / Power Feed**
	CMS3xxLPM-45	CMS3xxLPM-116	**Lincoln® Power MIG**
	CMS3xxM-45	CMS3xxM-116	**Miller®**
	xx = Standard lengths of 10, 12, 15, 20 and 25 ft. Custom lengths also available.		

#	Part Number	Description
1.	C23-37	Nozzle, Self Insulated, 3/8" I.D.
	C23-50	Nozzle, Self Insulated, 1/2" I.D.
	C23-62	Nozzle, Self Insulated, 5/8" I.D., **Std.**
	C23-75	Nozzle, Self Insulated, 5/8" I.D.
	C23T-37	Nozzle, Tapered, Self Insulated, 3/8" I.D.
2.	CHD24-50	Nozzle, H.D., 1/2" I.D.
	CHD24-62	Nozzle, H.D., 5/8" I.D.
	CHD24-75	Nozzle, H.D., 3/4" I.D.
3.	CHD24L-50	Nozzle, 1/2" I.D.
	CHD24L-62	Nozzle, 5/8" I.D.
	CHD24L-62F	Nozzle, 5/8" I.D., Flush
	CHD24L-75	Nozzle, 3/4" I.D.
4.	C14H-35	Contact Tip, H.D., .035" 0.9mm
	C14H-40	Contact Tip, H.D., .040" 1.0mm
	C14H-45	Contact Tip, H.D., .045" 1.2mm, **Std.**
	C14H-52	Contact Tip, H.D., .052" 1.4mm
	C14H-116	Contact Tip, H.D., 1/16" 1.6mm, **Std.**
	C14H-564	Contact Tip, H.D., 5/64" 2.0mm
	C14AH-364	Contact Tip, H.D., Aluminum, 3/64"
	C14AH-116	Contact Tip, H.D., Aluminum, 1/16"
5.	C16S-35	Contact Tip, H.D., .035" 0.9mm
	C16S-40	Contact Tip, H.D., .040" 1.0mm
	C16S-45	Contact Tip, H.D., .045" 1.2mm
	C16S-52	Contact Tip, H.D., .052" 1.4mm
	C16S-116	Contact Tip, H.D., 1/16" 1.6mm
	C16S-564	Contact Tip, H.D., 5/64" 2.0mm
	C16AS-364	Contact Tip, H.D., Aluminum, 3/64"
	C16AS-116	Contact Tip, H.D., Aluminum, 1/16"
6.	C16ST-35	Contact Tip, Tapered, .035" 0.9mm
	C16ST-40	Contact Tip, Tapered, .040" 1.0mm
	C16ST-45	Contact Tip, Tapered, .045" 1.2mm
	C16ST-52	Contact Tip, Tapered, .052" 1.4mm
	C16ST-116	Contact Tip, Tapered, 1/16" 1.6mm
7.	C54A	Gas Diffuser, **Std.**
8.	CHD54-16	Gas Diffuser, Heavy Duty
9.	CHD54-1	Repl. O-Ring
10.	C66J-3	Nozzle Insulator
11.	CMS64H-45	Conductor Tube, 45°
	CMS64H-60	Conductor Tube, 60°, **Std.**
	CMS64H-45LM	Conductor Tube, 45°, Long
	CMS64H-60LM	Conductor Tube, 60°, Long
12.	C152	Gun Hanger
13.	CMS84	Handle Assembly w/ Posts & Screws
14.	CELC94BL	Trigger Switch Blades
15.	CELC94	Trigger
16.	185-36-001	Cable Support Spring

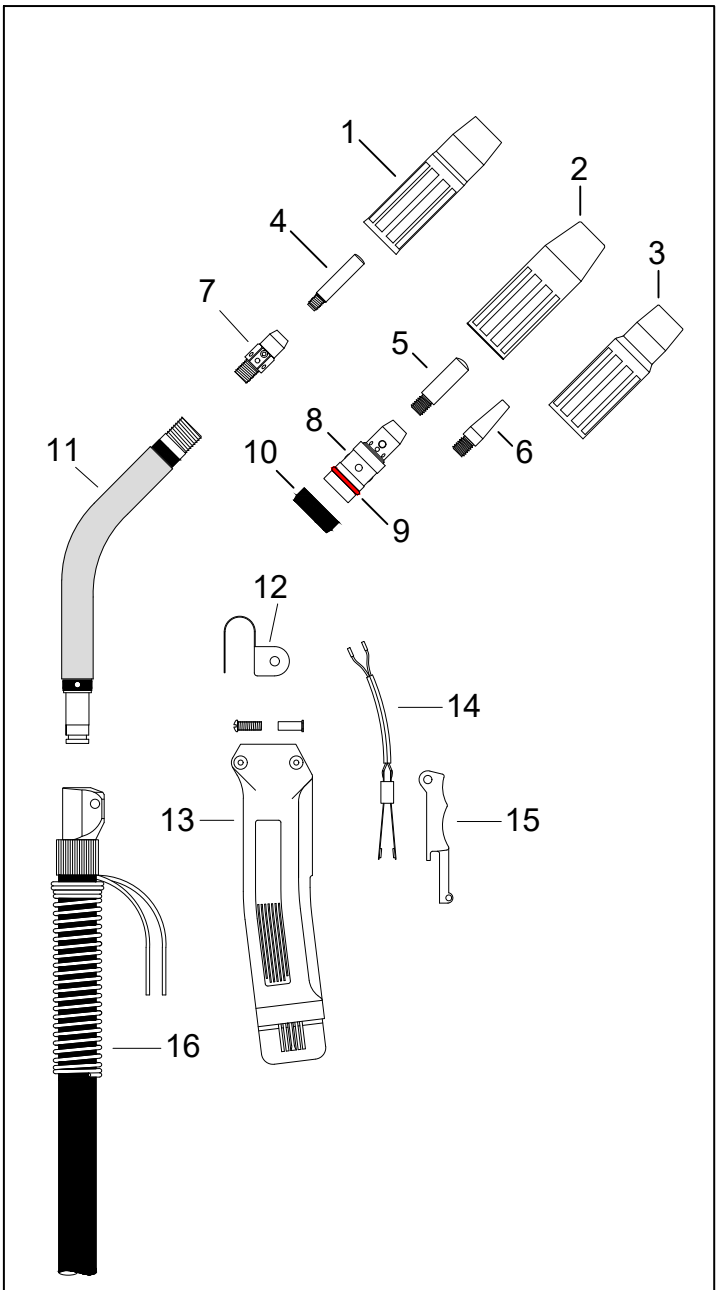

CM INDUSTRIES® INC.

COPYRIGHT © 2025 CM INDUSTRIES, INC. ALL RIGHTS RESERVED

#	Part Number	Description
17.	C350R-230-10S	Cable Support Spring
18. 18a.	CR6RC CM6RC	Round Connector Case, Miller & Lincoln Round Connector Case w/ Tabs, Tweco #4
19.	C350-174H	Gun Plug, Tweco #4
20.	C224	O-Ring, Tweco #4
21.	C44C	Set Screw
22.	C350-174MH	Gun Plug, Miller
23.	C174M-N	Conduit Nut, Miller
24.	C350-174LH	Gun Plug, Lincoln LN
25.	B8631	Gas Hose Nipple
26.	C350-174LPMH	Gun Plug, Lincoln PM & LF, Power Feed
27.	300-05-001	Electrical Plug, Miller
28.	300-05-002	Electrical Plug, Lincoln
29.	185-36-001	Cable Support Spring
30.	260-25-002	Adaptor Support, Euro
31.	285-01-001	Adaptor Support Screw
32.	290-01-012	Hex Nut, M12
33.	300-05-010	Male Terminal
34.	401-00-001	Adaptor Nut
35.	C174EX-1	Euro-Kwik Adaptor Assembly
36.	C174EX-1G	Repl. O-Ring, Euro
37.	C174EX-1C	Repl. Conduit Nut, Euro-Kwik
38.	C44-3545-15 C44-3545-25 C44-116-15 C44-116-25 C44-564-15 C44-564-25 C44N-3545-15 C44N-116-15	Liner Assembly, 15', .035"-.045" Liner Assembly, 25', .035"-.045" Liner Assembly, 15', .052"-.062" Liner Assembly, 25', .052"-.062" Liner Assembly, 15', 5/64" Liner Assembly, 25', 5/64" Nylon Liner Assembly, 15', .035"-.045" Nylon Liner Assembly, 15', .062"

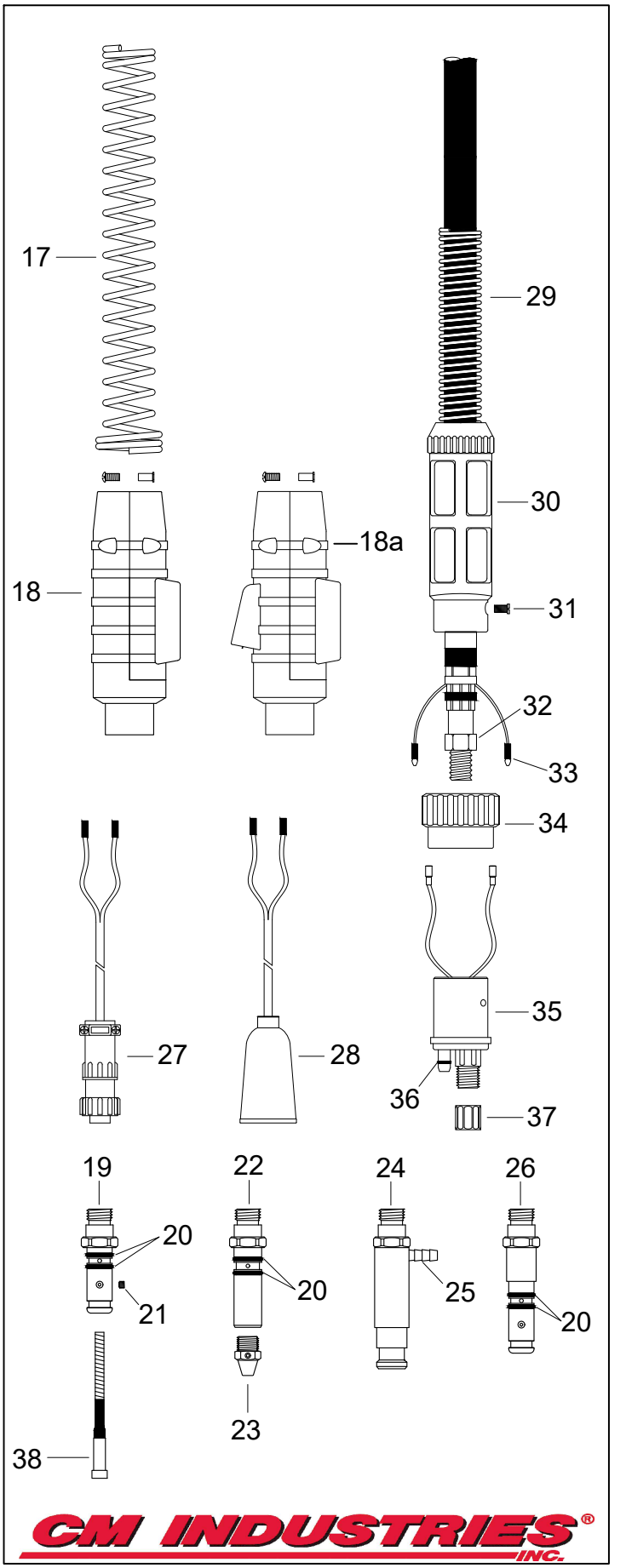

COPYRIGHT © 2025 CM INDUSTRIES, INC. ALL RIGHTS RESERVED

TWC 400

AIR-COOLED MIG GUN

Replacement Suitable for Tweco®

RATING	GUN ORDERING PART NUMBER		GUN PLUG Direct Connect
	.035"-.045"	.052"-1/16"	
400 Amp CO2 @ 80% Duty Cycle **300 Amp Mixed Gas @ 80% Duty Cycle** **Wire Capacity: 0.030" (0.8mm) - 5/64" (2.0mm)**	C4xx-3545 CX4xx-3545 CH4xx-3545 CL4xx-3545 CLPM4xx-3545 CLF4xx-3545 CM4xx-3545	C4xx-116 CX4xx-116 CH4xx-116 CL4xx-116 CLPM4xx-116 CLF4xx-116 CM4xx-116	**Tweco® #4** **Euro** **Hobart®** **Lincoln® LN** **Lincoln® Power MIG** **Lincoln® LF / Power Feed** **Miller®**
	Optional: Add "-45" for 45° Neck. Ex: CM415-3545-**45**		
	xx = Standard lengths of 10, 12, 15, 20 and 25 ft. Custom lengths also available.		

#	Part Number	Description
1.	C24A-50	Nozzle, 1/2" I.D. Adjustable
	C24A-62	Nozzle, 5/8" I.D. Adjustable, **Std.**
	C24A-75	Nozzle, 3/4" I.D. Adjustable
	C24A-37-SS	Nozzle, 3/8" I.D. Short Stop
	C24A-50-SS	Nozzle, 1/2" I.D. Short Stop
	C24A-62-SS	Nozzle, 5/8" I.D. Short Stop
	C24A-75-SS	Nozzle, 3/4" I.D. Short Stop
	C24AT-37-SS	Nozzle, Tapered, 3/8" I.D. Short Stop
	C23-37	Nozzle, Self Insulated, 3/8" I.D.
	C23-50	Nozzle, Self Insulated, 1/2" I.D.
	C23-62	Nozzle, Self Insulated, 5/8" I.D.
	C23-75	Nozzle, Self Insulated, 5/8" I.D.
	C23T-37	Nozzle, Tapered, Self Insulated, 3/8" I.D.
	C24CT-37-S	Nozzle, Coarse Thread, 3/8" I.D.
	C24CT-50-S	Nozzle, Coarse Thread, 1/2" I.D.
	C24CT-62-S	Nozzle, Coarse Thread, 5/8" I.D.
	C24CT-75-S	Nozzle, Coarse Thread, 3/4" I.D.
2.	C14-30	Contact Tip, .030" 0.8mm
	C14-35	Contact Tip, .035" 0.9mm
	C14-40	Contact Tip, .040" 1.0mm
	C14-45	Contact Tip, .045" 1.2mm
	C14-52	Contact Tip, .052" 1.4mm
	C14-116	Contact Tip, 1/16" 1.6mm
	C14-564	Contact Tip, 5/64" 2.0mm
	C14A-364	Contact Tip, Aluminum, 3/64"
	C14H-35	Contact Tip, H.D., .035" 0.9mm
	C14H-40	Contact Tip, H.D., .040" 1.0mm
	C14H-45	Contact Tip, H.D., .045" 1.2mm
	C14H-52	Contact Tip, H.D., .052" 1.4mm
	C14H-116	Contact Tip, H.D., 1/16" 1.6mm
	C14H-564	Contact Tip, H.D., 5/64" 2.0mm
	C14AH-364	Contact Tip, H.D., Aluminum, 3/64"
	C14AH-116	Contact Tip, H.D., Aluminum, 1/16"
	C14T-30	Contact Tip, Tapered, .030" 0.8mm
	C14T-35	Contact Tip, Tapered, .035" 0.9mm
	C14T-40	Contact Tip, Tapered, .040" 1.0mm
	C14T-45	Contact Tip, Tapered, .045" 1.2mm
	C14T-52	Contact Tip, Tapered, .052" 1.4mm
	C14T-116	Contact Tip, Tapered, 1/16" 1.6mm
3.	C34A	Nozzle Insulator *(Use w/ C24A's)*, **Std.**
4.	C54A	Gas Diffuser, **Std.**
5.	C34CT	Nozzle Insulator *(Use w/ C24CT's)*
6.	C64J-45	Conductor Tube, Jacketed, 45°
	C64J-60	Conductor Tube, Jacketed, 60°, **Std.**
	C64J-80	Conductor Tube, Jacketed, 80°
	C64J-180	Conductor Tube, Jacketed, 180°

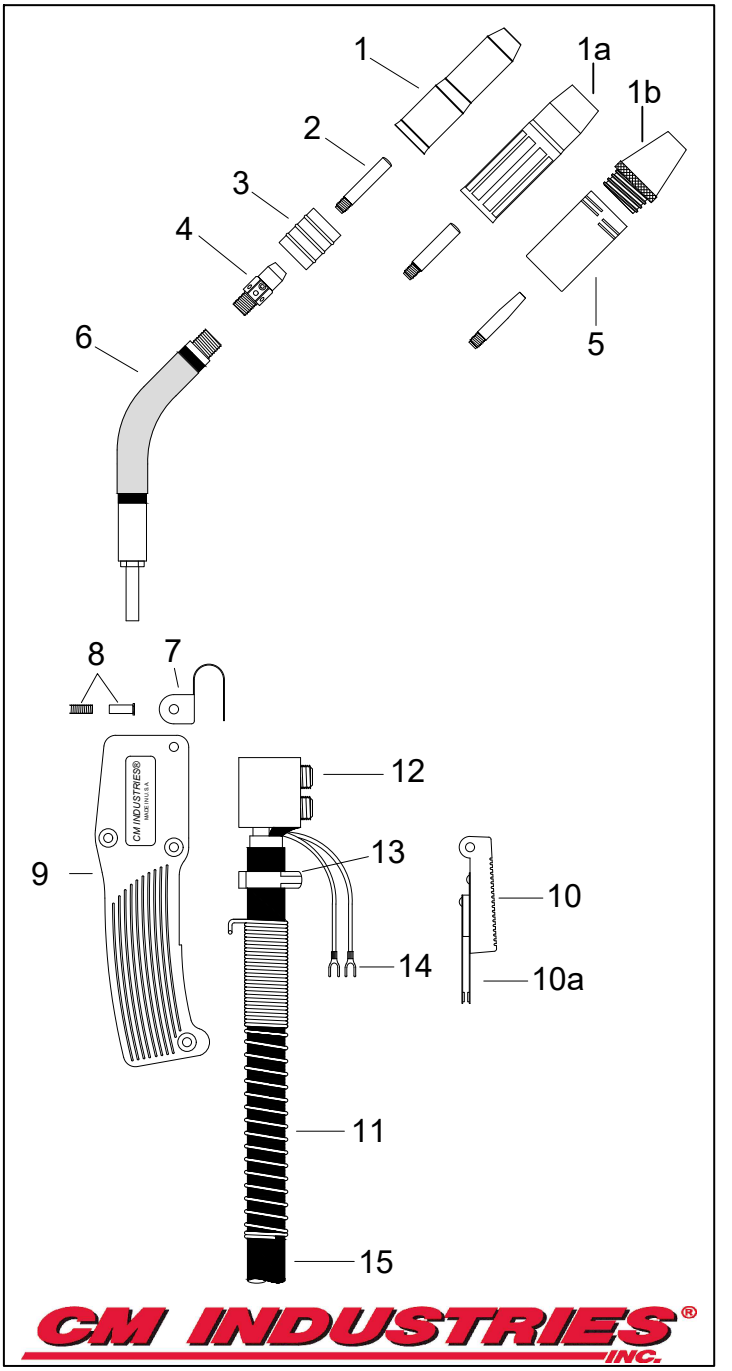

CM INDUSTRIES® INC.

COPYRIGHT © 2025 CM INDUSTRIES, INC. ALL RIGHTS RESERVED

#	Part Number	Description
7.	C152	Gun Hanger
8.	C122FM	Binder Screw & Post
9.	C84A	Handle w/ Screws & Posts
10.	C92	Trigger Switch Assembly
10a.	C92C	Repl. Trigger Blades
11.	C144-6S	Cable Support Spring
12.	C104	Cable Connetor Block Assembly
13.	C134-16	Power Cable Clamp
14.	C244	Control Wire Terminal
15.	C400-10	Power Cable, 10'
	C400-12	Power Cable, 12'
	C400-15	Power Cable, 15'
	C400-20	Power Cable, 20'
	C400-25	Power Cable, 25'
16.	C350R-230-10S	Cable Support Spring
17.	C104	Cable Connector Block Assembly
18.	CM170-4H	Connector Plug Adaptor
19.	CR6RC	Round Connector Case, Miller & Lincoln
19a.	CM6RC	Round Connector Case w/ Tabs, Tweco
20.	C350-174H	Gun Plug, Tweco
21.	C224	O-Ring
22.	C44C	Set Screw
23.	C350-174MH	Gun Plug, Miller
24.	C174M-N	Conduit Nut, Miller
25.	C350-174LH	Gun Plug, Lincoln LN
26.	B8631	Gas Hose Nipple
27.	C350-174LPMH	Gun Plug, Lincoln PM, LF, & Power Feed
28.	300-05-001	Electrical Plug, Miller & Lincoln Power MIG
29.	300-05-002	Electrical Plug, Lincoln LN & LF
30.	C400-10E	Euro Power Cable, 10'
	C400-12E	Euro Power Cable, 12'
	C400-15E	Euro Power Cable, 15'
	C400-20E	Euro Power Cable, 20'
	C400-25E	Euro Power Cable, 25'
31.	185-40-001	Cable Support Spring
32.	260-25-002	Adaptor Support, Euro
33.	285-01-001	Adaptor Support Screw
34.	290-01-012	Hex Nut, M12
35.	300-05-010	Male Terminal
36.	401-00-001	Adaptor Nut
37.	C174EX-1	Euro-Kwik Adaptor Assembly
38.	C174EX-1G	O-Ring, Euro
39.	C174EX-1C	Conduit Nut, Euro-Kwik
40.	C44-3545-15	Liner Assembly, 15', .035"-.045"
	C44-3545-25	Liner Assembly, 25', .035"-.045"
	C44-116-15	Liner Assembly, 15', .052"-.062"
	C44-116-25	Liner Assembly, 25', .052"-.062"
	C44-564-15	Liner Assembly, 15', 5/64"
	C44-564-25	Liner Assembly, 25', 5/64"
	C44N-3545-15	Nylon Liner Assembly, 15', .035"-.045"
	C44N-116-15	Nylon Liner Assembly, 15', .052"-.062"

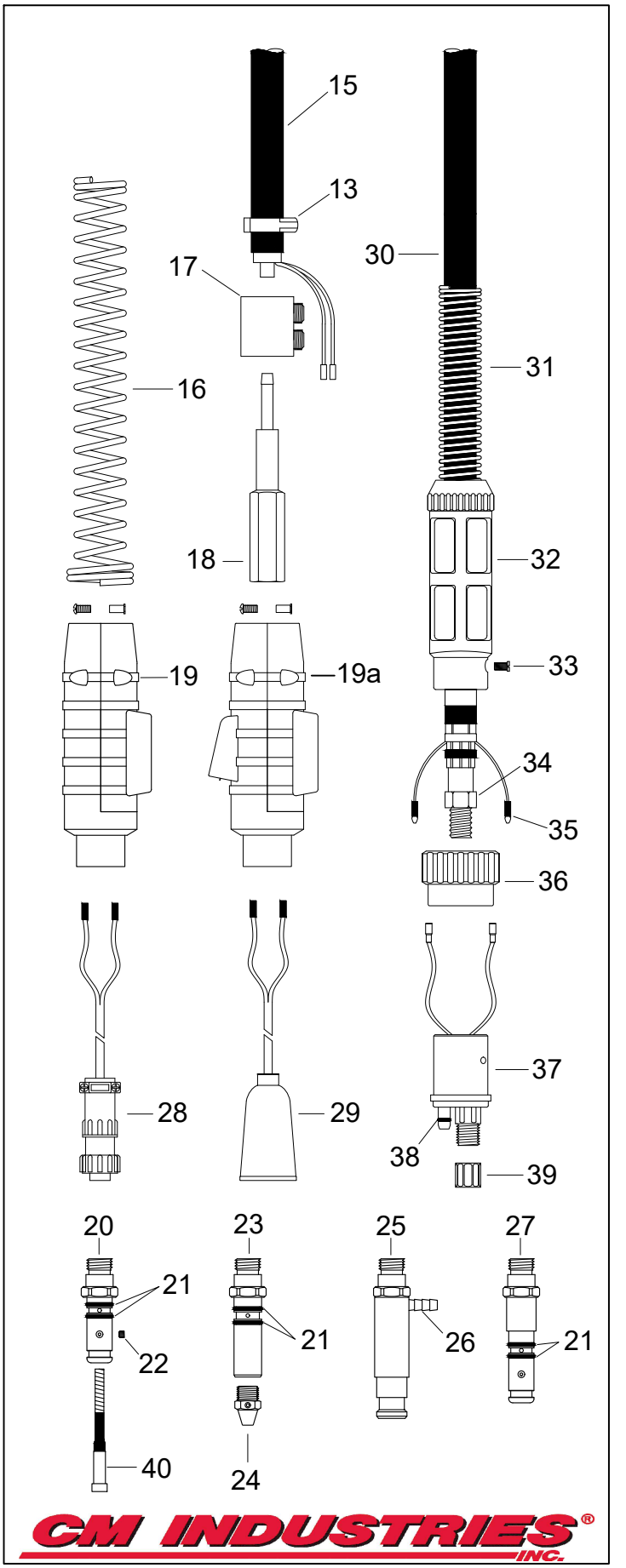

COPYRIGHT © 2025 CM INDUSTRIES, INC. ALL RIGHTS RESERVED

400 AMP HD AIR-COOLED MIG GUN

Replacement Suitable for Profax®

RATING	GUN ORDERING PART NUMBER		GUN PLUG Direct Connect
	.035"-.045"	1/16"	
400 Amp CO2 @ 80% Duty Cycle 325 Amp Mixed Gas @ 80% Duty Cycle Wire Capacity: 0.035" (0.9mm) - 5/64" (2.0mm)	HD400-3545-xx	HD400-116-xx	**Tweco® #4**
	HDX400-3545-xx	HDX400-116-xx	**Euro**
	HDLN400-3545-xx	HDLN400-116-xx	**Lincoln® LN**
	HDLF400-3545-xx	HDLF400-116-xx	**Lincoln® LF / Power Feed**
	HDLP400-3545-xx	HDLP400-116-xx	**Lincoln® Power MIG**
	HDM400-3545-xx	HDM400-116-xx	**Miller®**
	Optional: Add "-60" for 60° Neck. Ex: HDM250-3035-15-**60**		
	xx = Standard lengths of 10, 12, 15, 20 and 25 ft. Custom lengths also available.		

#	Part Number	Description
1.	27S50	H.D. Nozzle, 1/2" I.D.
	27S62	H.D. Nozzle, 5/8" I.D., **Std.**
	27S75	H.D. Nozzle, 3/4" I.D.
	27T38	Tapered Nozzle, 3/8" I.D., Brass *(For SLT Tips)*
	27TC38	Tapered Nozzle, 3/8" I.D. *(For 17SLT Tips)*
	27T50	Nozzle, 1/2" I.D., Bottle Neck
	27K50	M.D. Nozzle, 1/2" I.D.
	27K62	M.D. Nozzle, 5/8" I.D.
2.	17ST-30	Contact Tip .030" Tapered
	17ST-35	Contact Tip .035" Tapered
	17ST-45	Contact Tip .045" Tapered
	17ST-52	Contact Tip .052" Tapered
	17ST-116	Contact Tip 1/16" Tapered
	17ST-564	Contact Tip 5/64" Tapered
	16ST-30	Contact Tip .030" Tapered
	16ST-35	Contact Tip .035" Tapered
	16ST-45	Contact Tip .045" Tapered
	16ST-52	Contact Tip .052" Tapered
	16ST-116	Contact Tip 1/16" Tapered
2a.	17SLT-35	Contact Tip .035" Long Taper
	17SLT-45	Contact Tip .045" Long Taper
	17SLT-52	Contact Tip .052" Long Taper
2b.	17S-30	Contact Tip .030" } **Std.**
	17S-35	Contact Tip .035"
	17S-45	Contact Tip .045"
	17AS-364	Contact Tip 3/64"
	17S-52	Contact Tip .052"
	17S-116	Contact Tip 1/16"
	17S-564	Contact Tip 5/64"
	16S-35	Contact Tip .035"
	16S-45	Contact Tip .045"
	16AS-364	Contact Tip 3/64"
	16S-52	Contact Tip .052"
	16S-116	Contact Tip 1/16"
	16S-564	Contact Tip 5/64"
3.	57HD	Gas Diffuser
4.	17SW	H.D. Shock Washer
5.	64A45TJ	Jacketed Gooseneck, 45°, **Std.**
	64A60TJ	Jacketed Gooseneck, 60°
6.	C152	Gun Hanger
7.	C122FM	Binder Screw & Post
8.	C84A	Handle w/ Screws & Posts
9.	C92	Trigger Switch Assembly
9a.	C92C	Repl. Trigger Blades
10.	C144-6S	Cable Support Spring
11.	C104	Cable Connetor Block Assembly
12.	C134-16	Power Cable Clamp
13.	C244	Control Wire Terminal

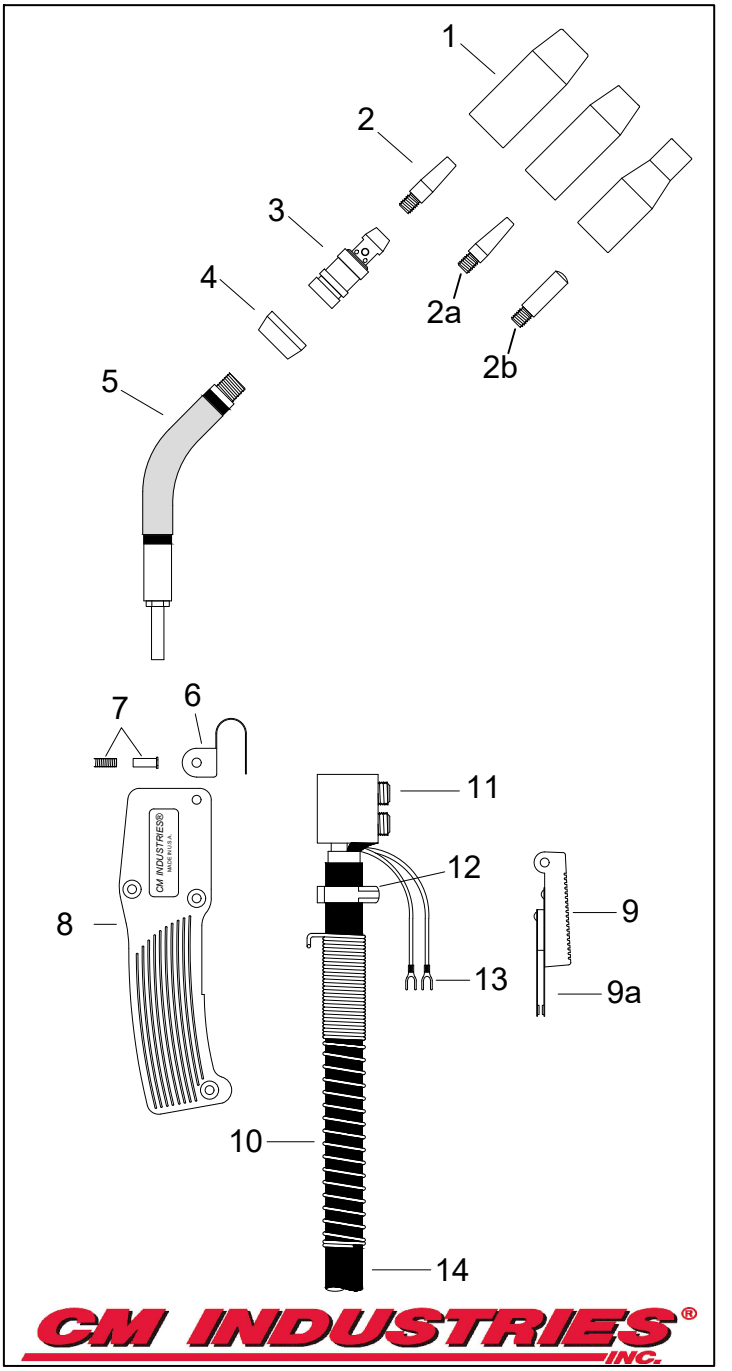

CM INDUSTRIES® INC.

COPYRIGHT © 2025 CM INDUSTRIES, INC. ALL RIGHTS RESERVED

#	Part Number	Description
14.	C400-10	Power Cable, 10'
	C400-12	Power Cable, 12'
	C400-15	Power Cable, 15'
	C400-20	Power Cable, 20'
	C400-25	Power Cable, 25'
15.	C350R-230-10S	Cable Support Spring
16.	C104	Cable Connector Block Assembly
17.	CM170-4H	Connector Plug Adaptor
18.	CR6RC	Round Connector Case, Miller & Lincoln
18a.	CM6RC	Round Connector Case w/ Tabs, Tweco
19.	C350-174H	Gun Plug, Tweco #4
20.	C224	O-Ring
21.	C44C	Set Screw
22.	C350-174MH	Gun Plug, Miller
23.	C174M-N	Conduit Nut, Miller
24.	C350-174LH	Gun Plug, Lincoln LN
25.	B8631	Gas Hose Nipple
26.	C350-174LPMH	Gun Plug, Lincoln PM, LF, & Power Feed
27.	300-05-001	Electrical Plug, Miller & Lincoln Power MIG
28.	300-05-002	Electrical Plug, Lincoln LN & LF
29.	C400-10E	Euro Power Cable, 10'
	C400-12E	Euro Power Cable, 12'
	C400-15E	Euro Power Cable, 15'
	C400-20E	Euro Power Cable, 20'
	C400-25E	Euro Power Cable, 25'
30.	185-40-001	Cable Support Spring
31.	260-25-002	Adaptor Support, Euro
32.	285-01-001	Adaptor Support Screw
33.	290-01-012	Hex Nut, M12
34.	300-05-010	Male Terminal
35.	401-00-001	Adaptor Nut
36.	C174EX-1	Euro-Kwik Adaptor Assembly
37.	C174EX-1G	O-Ring, Euro
38.	C174EX-1C	Conduit Nut, Euro-Kwik
39.	C44-3545-15	Liner Assembly, 15', .035"-.045"
	C44-3545-25	Liner Assembly, 25', .035"-.045"
	C44-116-15	Liner Assembly, 15', .052"-.062"
	C44-116-25	Liner Assembly, 25', .052"-.062"
	C44-564-15	Liner Assembly, 15', 5/64"
	C44-564-25	Liner Assembly, 25', 5/64"
	C44N-3545-15	Nylon Liner Assembly, 15', .035"-.045"
	C44N-116-15	Nylon Liner Assembly, 15', .052"-.062"

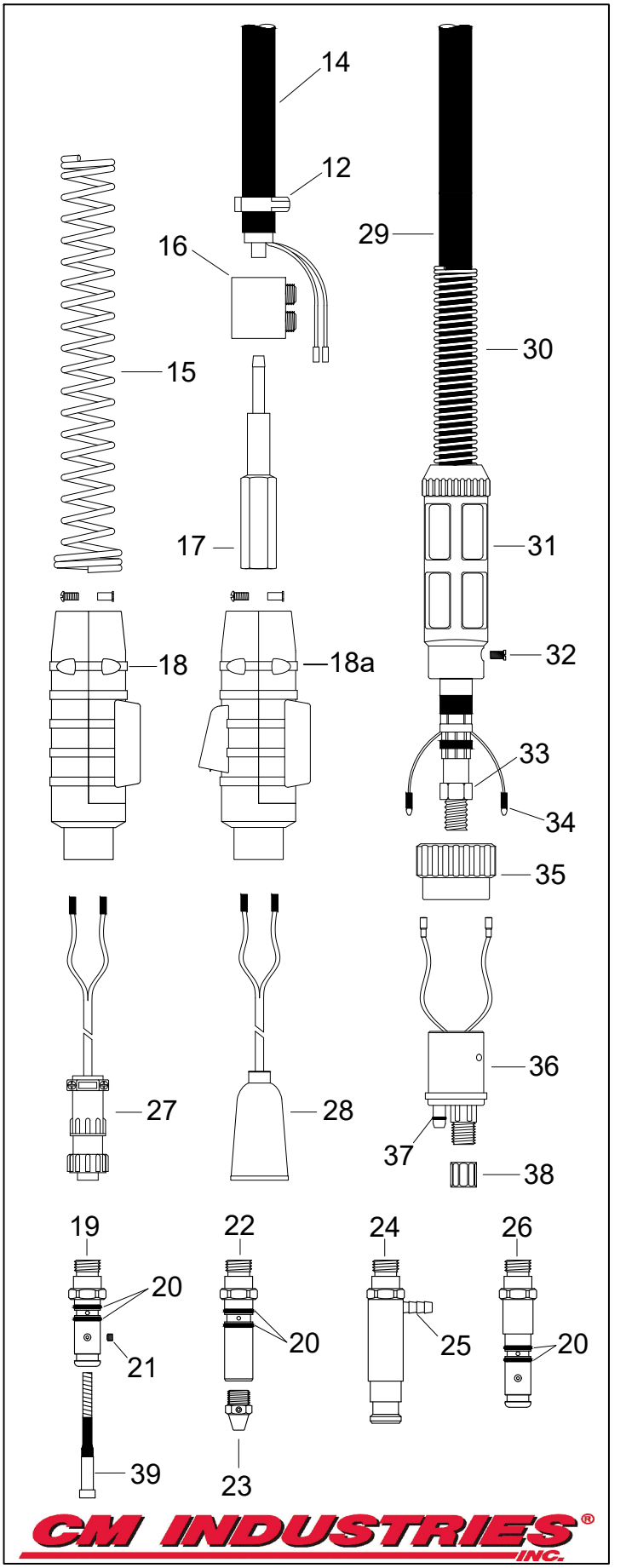

COPYRIGHT © 2025 CM INDUSTRIES, INC. ALL RIGHTS RESERVED

TWC 450SM

AIR-COOLED MIG GUN

Replacement Suitable for Tweco®

RATING	GUN ORDERING PART NUMBER		GUN PLUG Direct Connect
	.035"-.045"	.052"-1/16"	
450 Amp CO2 @ 80% Duty Cycle **350 Amp Mixed Gas @ 80% Duty Cycle** **Wire Capacity: 0.035" (0.9mm) - 5/64" (2.0mm)**	CMS4xx-45	CMS4xx-116	**Tweco® #4**
	CMS4xxX-45	CMS4xxX-116	**Euro**
	CMS4xxL-45	CMS4xxL-116	**Lincoln® LN**
	CMS4xxLF-45	CMS4xxLF-116	**Lincoln® LF / Power Feed**
	CMS4xxLPM-45	CMS4xxLPM-116	**Lincoln® Power MIG**
	CMS4xxM-45	CMS4xxM-116	**Miller®**
	xx = Standard lengths of 10, 12, 15, 20 and 25 ft. Custom lengths also available.		

#	Part Number	Description
1.	CHD24-50	Nozzle, H.D., 1/2" I.D.
	CHD24-62	Nozzle, H.D., 5/8" I.D., **Std.**
	CHD24-75	Nozzle, H.D., 3/4" I.D.
2.	CHD24L-50	Nozzle, 1/2" I.D.
	CHD24L-62	Nozzle, 5/8" I.D.
	CHD24L-62F	Nozzle, 5/8" I.D., Flush
	CHD24L-75	Nozzle, 3/4" I.D.
3.	C16S-35	Contact Tip, H.D., .035" 0.9mm
	C16S-40	Contact Tip, H.D., .040" 1.0mm
	C16S-45	Contact Tip, H.D., .045" 1.2mm
	C16S-52	Contact Tip, H.D., .052" 1.4mm
	C16S-116	Contact Tip, H.D., 1/16" 1.6mm
	C16S-564	Contact Tip, H.D., 5/64" 2.0mm
	C16AS-364	Contact Tip, H.D., Aluminum, 3/64"
	C16AS-116	Contact Tip, H.D., Aluminum, 1/16"
	C16ST-35	Contact Tip, Tapered, .035" 0.9mm
	C16ST-40	Contact Tip, Tapered, .040" 1.0mm
	C16ST-45	Contact Tip, Tapered, .045" 1.2mm
	C16ST-52	Contact Tip, Tapered, .052" 1.4mm
	C16ST-116	Contact Tip, Tapered, 1/16" 1.6mm
4.	CHD54-16	Gas Diffuser, Heavy Duty, **Std.**
5.	CHD54-1	Repl. O-Ring
6.	C66J-3	Nozzle Insulator, **Std.**
7.	CMS64H-45	Conductor Tube, 45°
	CMS64H-60	Conductor Tube, 60°, **Std.**
	CMS64H-45LM	Conductor Tube, 45°, Long
	CMS64H-60LM	Conductor Tube, 60°, Long
8.	C152	Gun Hanger
9.	CMS84	Handle Assembly w/ Posts & Screws
10.	CELC94BL	Trigger Switch Blades
11.	CELC94	Trigger
12.	185-40-001	Cable Support Spring

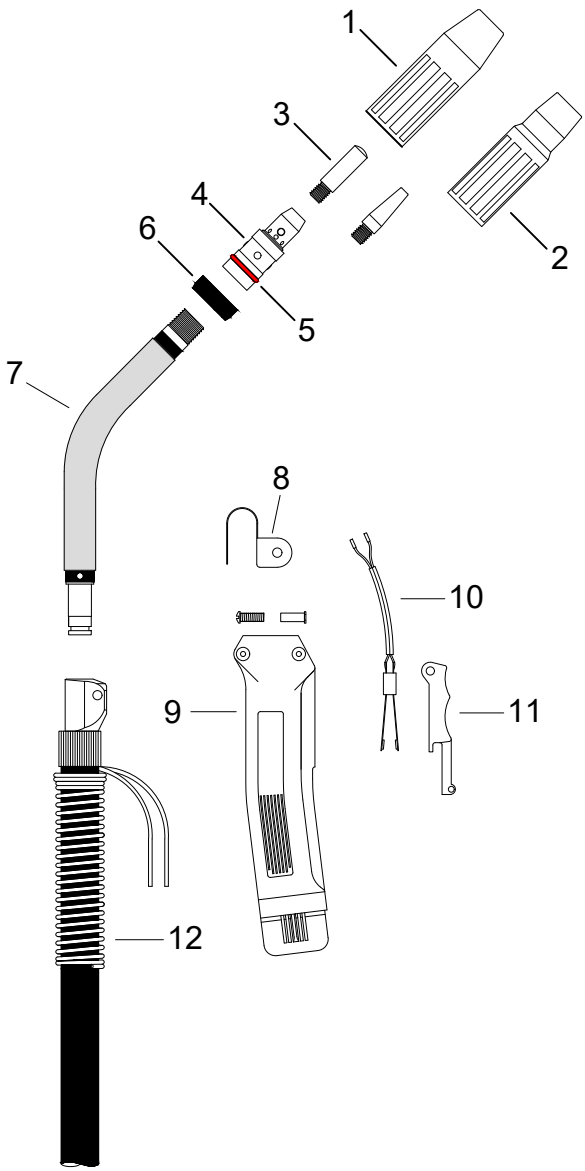

CM INDUSTRIES® INC.

COPYRIGHT © 2025 CM INDUSTRIES, INC. ALL RIGHTS RESERVED

#	Part Number	Description
13.	C350R-230-10S	Cable Support Spring
14. 14a.	CR6RC CM6RC	Round Connector Case, Miller & Lincoln Round Connector Case w/ Tabs, Tweco #4
15.	C350-174H	Gun Plug, Tweco #4
16.	C224	O-Ring, Tweco #4
17.	C44C	Set Screw
18.	C350-174MH	Gun Plug, Miller
19.	C174M-N	Conduit Nut, Miller
20.	C350-174LH	Gun Plug, Lincoln LN
21.	B8631	Gas Hose Nipple
22.	C350-174LPMH	Gun Plug, Lincoln PM & LF, Power Feed
23.	300-05-001	Electrical Plug, Miller
24.	300-05-002	Electrical Plug, Lincoln
25.	185-40-001	Cable Support Spring
26.	260-25-002	Adaptor Support, Euro
27.	285-01-001	Adaptor Support Screw
28.	290-01-012	Hex Nut, M12
29.	300-05-010	Male Terminal
30.	401-00-001	Adaptor Nut
31.	C174EX-1	Euro-Kwik Adaptor Assembly
32.	C174EX-1G	Repl. O-Ring, Euro
33.	C174EX-1C	Repl. Conduit Nut, Euro-Kwik
34.	C44-3545-15 C44-3545-25 C44-116-15 C44-116-25 C44-564-15 C44-564-25 C44N-3545-15 C44N-116-15	Liner Assembly, 15', .035"-.045" Liner Assembly, 25', .035"-.045" Liner Assembly, 15', .052"-.062" Liner Assembly, 25', .052"-.062" Liner Assembly, 15', 5/64" Liner Assembly, 25', 5/64" Nylon Liner Assembly, 15', .035"-.045" Nylon Liner Assembly, 15', .062"

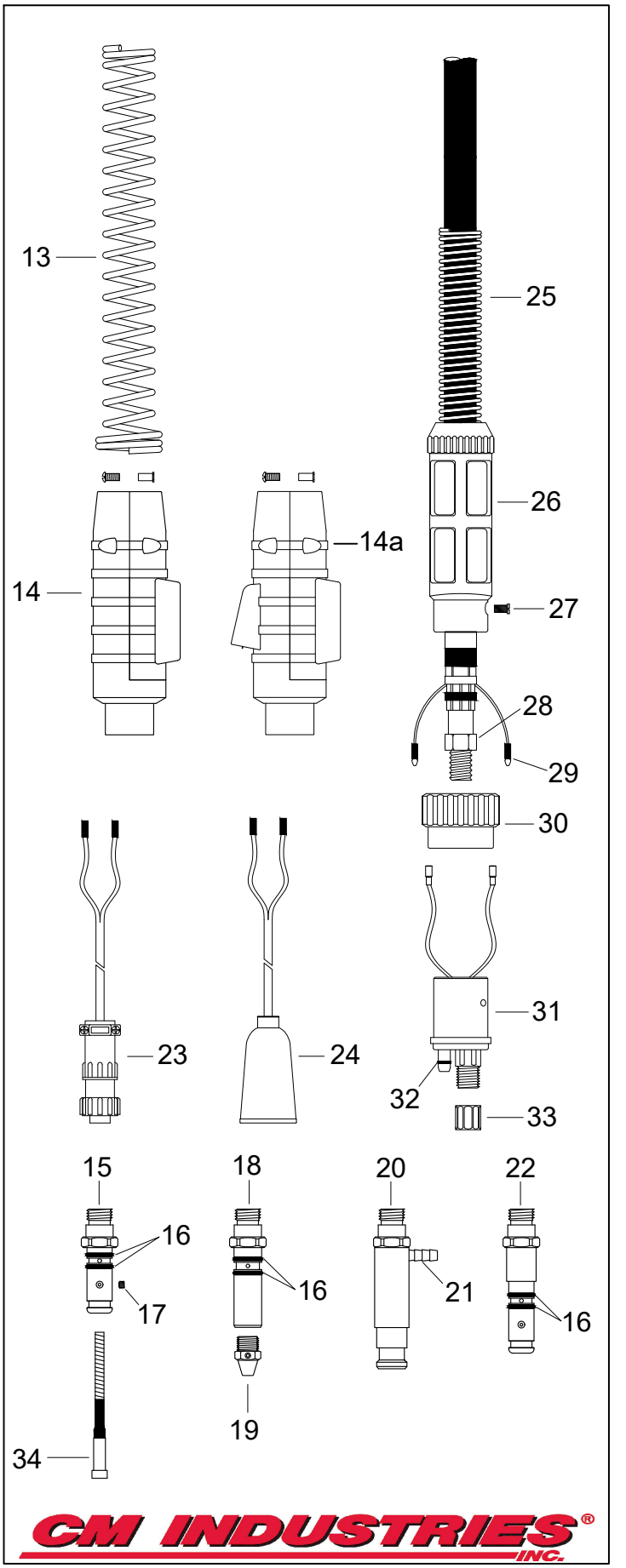

COPYRIGHT © 2025 CM INDUSTRIES, INC. ALL RIGHTS RESERVED

TWC 500

AIR-COOLED MIG GUN

Replacement Suitable for Tweco®

RATING	GUN ORDERING PART NUMBER		GUN PLUG Direct Connect
	1/16"	3/32"	
500 Amp CO2 @ 80% Duty Cycle 375 Amp Mixed Gas @ 80% Duty Cycle Wire Capacity: 0.035" (0.9mm) - 7/64" (2.8mm)	C5xx-116	C5xx-332	Tweco® #5
	CX5xx-116	CX5xx-332	Euro
	CL5xx-116	CL5xx-332	Lincoln® LN
	CLF5xx-116	CLF5xx-332	Lincoln® LF/ Power Feed
	CM5xx-116	CM5xx-332	Miller®
	Optional: Add "-45" for 45° Neck. Ex: CM515-116-**45**		
	xx = Standard lengths of 10, 12, 15, 20 and 25 ft. Custom lengths also available.		

#	Part Number	Description
1.	C25CT-50	Nozzle, 1/2" I.D.
	C25CT-62	Nozzle, 5/8" I.D., **Std.**
	C25CT-75	Nozzle, 3/4" I.D.
2.	C15H-35	Contact Tip, H.D., .035" 0.9mm
	C15H-40	Contact Tip, H.D., .040" 1.0mm
	C15H-45	Contact Tip, H.D., .045" 1.2mm
	C15H-52	Contact Tip, H.D., .052" 1.4mm
	C15H-116	Contact Tip, H.D., 1/16" 1.6mm
	C15H-564	Contact Tip, H.D., 5/64" 2.0mm
	C15H-332	Contact Tip, H.D., 3/32" 2.4mm
	C15H-764	Contact Tip, H.D., 7/64" 2.8mm
	C15AH-364	Contact Tip, H.D., Aluminum, 3/64"
	C15AH-116	Contact Tip, H.D., Aluminum, 1/16"
3.	C15HFC-35	Contact Tip, H.D., .035" 0.9mm
	C15HFC-40	Contact Tip, H.D., .040" 1.0mm
	C15HFC-45	Contact Tip, H.D., .045" 1.2mm
	C15HFC-52	Contact Tip, H.D., .052" 1.4mm
	C15HFC-116	Contact Tip, H.D., 1/16" 1.6mm
	C15HFC-564	Contact Tip, H.D., 5/64" 2.0mm
	C15HFC-332	Contact Tip, H.D., 3/32" 2.4mm
	C15HFC-764	Contact Tip, H.D., 7/64" 2.8mm
4.	C35CT	Nozzle Insulator
5.	C55SW	Gas Diffuser, Use w/ .035"-1/16"
	C55	Gas Diffuser, Use w/ 5/64"
	C55H	Gas Diffuser, Use w/ 3/32"-7/64"
6.	C65J-45	Conductor Tube, Jacketed, 45°
	C65J-60	Conductor Tube, Jacketed, 60°, **Std.**
	C65J-80	Conductor Tube, Jacketed, 80°
	C65J-180	Conductor Tube, Jacketed, 180°
7.	C154	Gun Hanger
8.	C124FM	Binder Screw & Post
9.	C85	Handle w/ Screws & Posts
10.	C94R	Trigger Switch Assembly
10a.	C94C	Repl. Trigger Blades
11.	C145-6S	Cable Support Spring
12.	C104	Cable Connector Block Assembly
13.	C134-16	Power Cable Clamp, 22.6
14.	C244	Control Wire Terminal
15.	C500	Power Cable, Per Foot

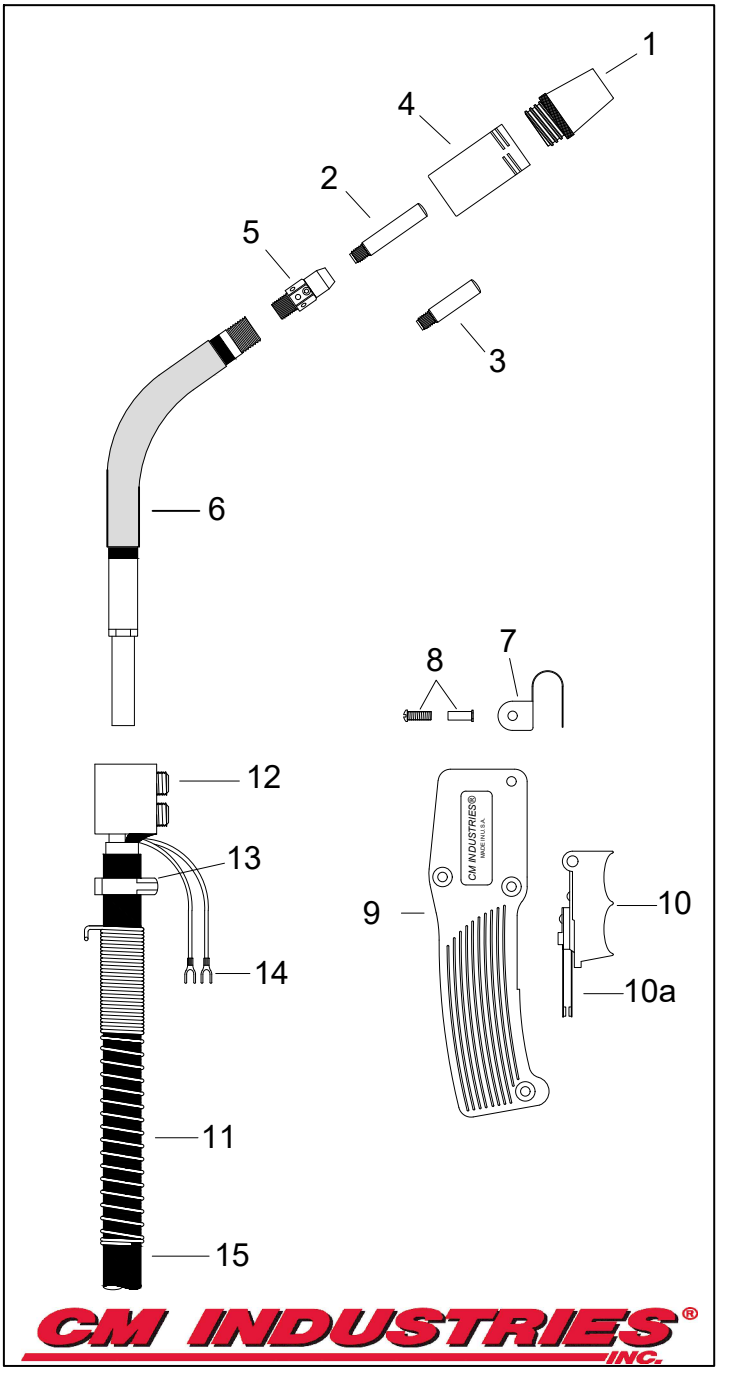

COPYRIGHT © 2025 CM INDUSTRIES, INC. ALL RIGHTS RESERVED

#	Part Number	Description
16.	C350R-230-10S	Cable Support Spring
17.	C104	Cable Connector Block Assembly
18.	CM170-5H	Connector Plug Adaptor
19.	CR6RC	Round Connector Case, Miller & Lincoln
19a.	CM6RC	Round Connector Case w/ Tabs, Tweco #5
20.	C176S-H	Gun Plug, Tweco #5
21.	C225	O-Ring For #5
22.	C44C	Set Screw
23.	CEL176-MH	Gun Plug, Miller
24.	C224	O-Ring
25.	C175M-N	Conduit Nut, Miller
26.	CEL176-LH	Gun Plug, Lincoln
27.	B8631	Gas Hose Nipple
28.	C350-174H	Gun Plug, Tweco #4
29.	300-05-001	Electrical Plug, Miller
30.	300-05-002	Electrical Plug, Lincoln LN
31.	C500-10E	Euro Power Cable, 10'
	C500-12E	Euro Power Cable, 12'
	C500-15E	Euro Power Cable, 15'
	C500-20E	Euro Power Cable, 20'
	C500-25E	Euro Power Cable, 25'
32.	185-40-001	Cable Support Spring
33.	260-52-003	Adaptor Support, Euro
34.	285-01-001	Adaptor Support Screw
35.	290-01-012	Hex Nut, M12
36.	300-05-010	Male Terminal
37.	401-00-001	Adaptor Nut
38.	C174EX-1	Euro-Kwik Adaptor Assembly
39.	C174EX-1G	Repl. O-Ring, Euro
40.	C174EX-1C	Repl. Conduit Nut, Euro-Kwik
41.	C45-3545-15	Liner Assembly, 15' .035"-.045"
	C45-3545-25	Liner Assembly, 25' .035"-.045"
	C45-116-15	Liner Assembly, 15' 052."-.062"
	C45-116-25	Liner Assembly, 25' 052."-.062"
	C45-564-15	Liner Assembly, 15' 5/64"
	C45-564-25	Liner Assembly, 25' 5/64"
	C45H-332-15	Liner Assembly, 15' 3/32"
	C45H-332-25	Liner Assembly, 25' 3/32"
	C45H-764-15	Liner Assembly, 15' 7/64"
	C45H-764-25	Liner Assembly, 25' 7/64"
	C45N-3545-15	Nylon Liner Assembly, 15' .035"-.045"
	C45N-116-15	Nylon Liner Assembly, 15' 3/64"-.062"
	C45SN-116-15	Steel/Nylon Liner Assy., 15' .062"
	C45TF-116-15	Teflon Liner Assembly, 15' 3/64"-.062"
42.	**For Euro, Lincoln LF & Power Feed Direct Plugs**	
	C44-3545-15	Liner Assembly, 15', .035"-.045"
	C44-3545-25	Liner Assembly, 25', .035"-.045"
	C44-116-15	Liner Assembly, 15', 052."-.062"
	C44-116-25	Liner Assembly, 25', 052."-.062"
	C44-564-15	Liner Assembly, 15', 5/64"
	C44-564-25	Liner Assembly, 25', 5/64"
	C44-332-15	Liner Assembly, 15', 3/32"
	C44-332-25	Liner Assembly, 25', 3/32"
	C44N-3545-15	Nylon Liner Assembly, 15', .035"-.045"
	C44N-116-15	Nylon Liner Assembly, 15', .062"

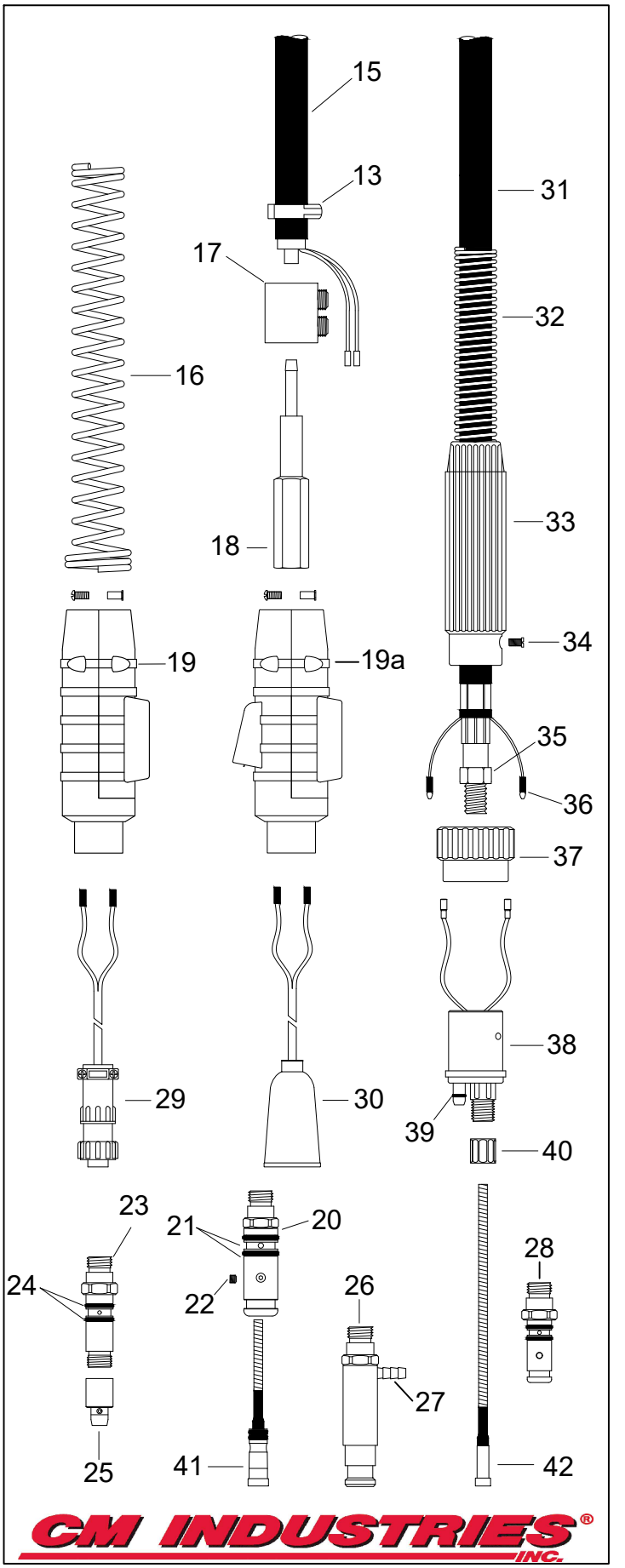

COPYRIGHT © 2025 CM INDUSTRIES, INC. ALL RIGHTS RESERVED

TWC 550SM

AIR-COOLED MIG GUN

Replacement Suitable for Tweco®

RATING	GUN ORDERING PART NUMBER		GUN PLUG Direct Connect
	.035"-.045"	.052"-1/16"	
550 Amp CO2 @ 80% Duty Cycle **425 Amp Mixed Gas @ 80% Duty Cycle** **Wire Capacity: 0.035" (0.9mm) - 5/64" (2.0mm)**	CMS5xx-45	CMS5xx-116	**Tweco® #4**
	CMS5xxX-45	CMS5xxX-116	**Euro**
	CMS5xxL-45	CMS5xxL-116	**Lincoln® LN**
	CMS5xxLF-45	CMS5xxLF-116	**Lincoln® LF / Power Feed**
	CMS5xxM-45	CMS5xxM-116	**Miller®**
	xx = Standard lengths of 10, 12, 15, 20 and 25 ft. Custom lengths also available.		

#	Part Number	Description
1.	CHD24-50	Nozzle, H.D., 1/2" I.D.
	CHD24-62	Nozzle, H.D., 5/8" I.D., **Std.**
	CHD24-75	Nozzle, H.D., 3/4" I.D.
2.	CHD24L-50	Nozzle, 1/2" I.D.
	CHD24L-62	Nozzle, 5/8" I.D.
	CHD24L-62F	Nozzle, 5/8" I.D., Flush
	CHD24L-75	Nozzle, 3/4" I.D.
3.	C16S-35	Contact Tip, H.D., .035" 0.9mm
	C16S-40	Contact Tip, H.D., .040" 1.0mm
	C16S-45	Contact Tip, H.D., .045" 1.2mm
	C16S-52	Contact Tip, H.D., .052" 1.4mm
	C16S-116	Contact Tip, H.D., 1/16" 1.6mm
	C16S-564	Contact Tip, H.D., 5/64" 2.0mm
	C16AS-364	Contact Tip, H.D., Aluminum, 3/64"
	C16AS-116	Contact Tip, H.D., Aluminum, 1/16"
	C16ST-35	Contact Tip, Tapered, .035" 0.9mm
	C16ST-40	Contact Tip, Tapered, .040" 1.0mm
	C16ST-45	Contact Tip, Tapered, .045" 1.2mm
	C16ST-52	Contact Tip, Tapered, .052" 1.4mm
	C16ST-116	Contact Tip, Tapered, 1/16" 1.6mm
4.	CHD54-16	Gas Diffuser, Heavy Duty, **Std.**
5.	CHD54-1	Repl. O-Ring
6.	C66J-3	Nozzle Insulator, **Std.**
7.	CMS64H-45	Conductor Tube, 45°
	CMS64H-60	Conductor Tube, 60°, **Std.**
	CMS64H-45LM	Conductor Tube, 45°, Long
	CMS64H-60LM	Conductor Tube, 60°, Long
8.	C152	Gun Hanger
9.	CMS84	Handle Assembly w/ Posts & Screws
10.	CELC94BL	Trigger Switch Blades
11.	CELC94	Trigger
12.	185-40-001	Cable Support Spring

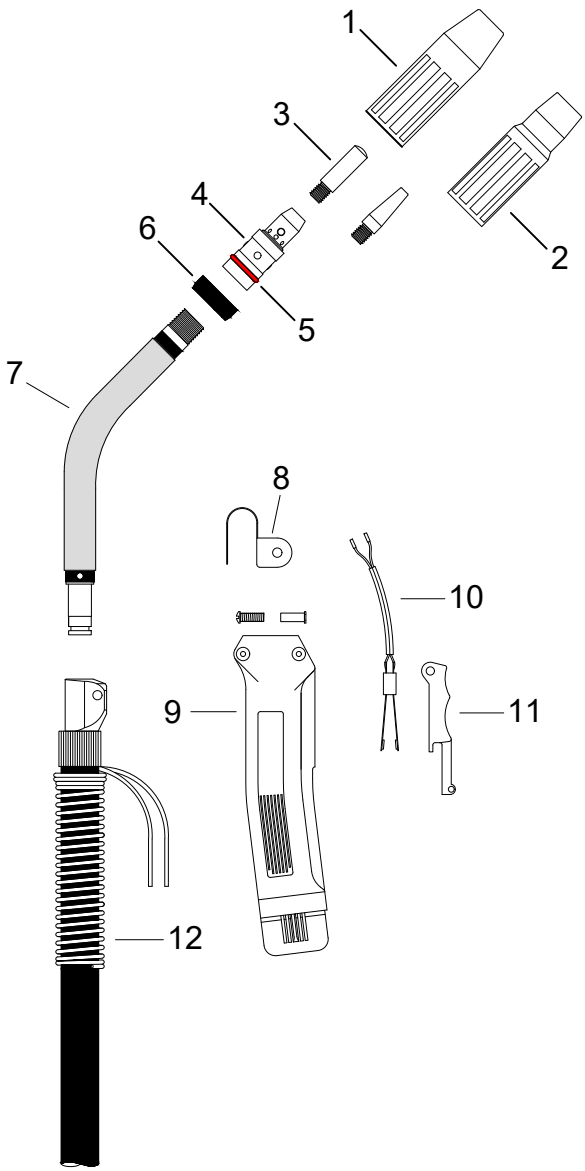

CM INDUSTRIES® INC.

COPYRIGHT © 2025 CM INDUSTRIES, INC. ALL RIGHTS RESERVED

#	Part Number	Description
13.	C350R-230-10S	Cable Support Spring
14. 14a.	CR6RC CM6RC	Round Connector Case, Miller & Lincoln Round Connector Case w/ Tabs, Tweco #4
15.	C350-174H	Gun Plug, Tweco #4
16.	C224	O-Ring, Tweco #4
17.	C44C	Set Screw
18.	C350-174MH	Gun Plug, Miller
19.	C174M-N	Conduit Nut, Miller
20.	C350-174LH	Gun Plug, Lincoln LN
21.	B8631	Gas Hose Nipple
22.	C350-174LPMH	Gun Plug, Lincoln PM & LF, Power Feed
23.	300-05-001	Electrical Plug, Miller
24.	300-05-002	Electrical Plug, Lincoln
25.	185-52-001	Cable Support Spring
26.	260-52-003	Adaptor Support, Euro
27.	285-01-001	Adaptor Support Screw
28.	290-01-012	Hex Nut, M12
29.	300-05-010	Male Terminal
30.	401-00-001	Adaptor Nut
31.	C174EX-1	Euro-Kwik Adaptor Assembly
32.	C174EX-1G	Repl. O-Ring, Euro
33.	C174EX-1C	Repl. Conduit Nut, Euro-Kwik
34.	C44-3545-15 C44-3545-25 C44-116-15 C44-116-25 C44-564-15 C44-564-25 C44N-3545-15 C44N-116-15	Liner Assembly, 15', .035"-.045" Liner Assembly, 25', .035"-.045" Liner Assembly, 15', .052"-.062" Liner Assembly, 25', .052"-.062" Liner Assembly, 15', 5/64" Liner Assembly, 25', 5/64" Nylon Liner Assembly, 15', .035"-.045" Nylon Liner Assembly, 15', .062"

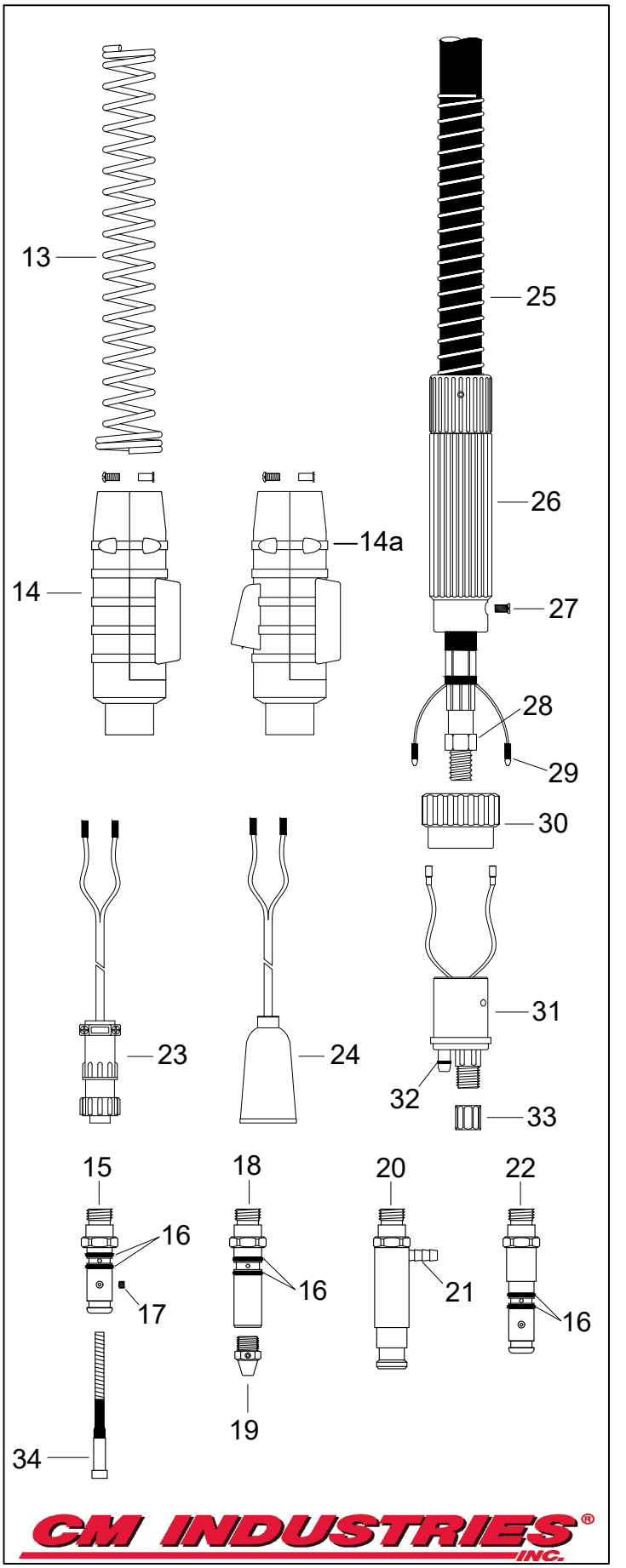

COPYRIGHT © 2025 CM INDUSTRIES, INC. ALL RIGHTS RESERVED

WC3500 - 3 Gallon
Stainless Steel Water Cooler



For more info, see page 154.

COPYRIGHT © 2025 CM INDUSTRIES, INC. ALL RIGHTS RESERVED

MIG Guns Automatic

Automatic MIG Welding Guns

- **Versatile Options**: Available in both Air-Cooled (400A/500A) and Water-Cooled (500A) designs
- **Standard Lengths**: Offered in 4, 6, 8, 10, 12, 15, 20, & 25 feet; custom lengths upon request
- **High Performance**: Rated up to 500 Amps CO2 @ 100% Duty Cycle, supporting wire sizes from .035″ to 3/32″
- **OEM Compatibility**: Seamlessly connect with all major OEM systems
- **Premium Styles**: Models include Binzel®, Tregaskiss®, and Tweco® styles for robust performance and reliability







Custom Torches Available Upon Request

COPYRIGHT © 2025 CM INDUSTRIES, INC. ALL RIGHTS RESERVED

BNZ 501AUTO WATER-COOLED MIG GUN

Replacement Suitable for Binzel®

Ordering Information

BZA5 06 - 18 - 45 E

Gun Model & Amperage
BZA5 CM Industries 501W 500 Amp Water-Cooled MIG Gun

Length

04	4 ft. (1.23m)
06	6 ft. (1.83m)
08	8 ft. (2.44m)
10	10 ft. (3.05m)
12	12 ft. (3.66m)
15	15 ft. (4.57m)

Neck

18	180°
22	22°
45	45°

Wire Size

35	.035" 0.8mm
45	.045" 1.2mm
52	.052" 1.4mm
62	1/16" 1.6mm

Connector Plug

E	Euro
L	Lincoln® LN
N	Lincoln® LF & Power Feed
T	Tweco® 4 (Standard Lead)
M	Miller®
V	Lincoln® Power MIG

#	Part Number	Description
1.	165-52-001	Nozzle, Conical, 5/8" I.D., **Std.**
	165-52-305	Nozzle, Conical Heavy Duty, 5/8" I.D.
2.	165-52-002	Nozzle, Cylindrical, 3/4" I.D.
3.	165-52-011	Nozzle, Conical Small, 9/16" I.D.
	165-52-111	Nozzle, Conical Super Small, 7/16" I.D.
4.	150-08-130	Contact Tip, M8, .030" 0.8mm
	150-09-130	Contact Tip, M8, .035" 0.9mm
	150-10-130	Contact Tip, M8, .040" 1.0mm
	150-12-130	Contact Tip, M8, .045" 1.2mm
	150-14-130	Contact Tip, M8, .052" 1.4mm
	150-16-130	Contact Tip, M8, 1/16" 1.6mm
	150-20-130	Contact Tip, M8, 5/64" 2.0mm
	150-24-130	Contact Tip, M8, 3/32" 2.4mm
5.	046-52-002	Insulator/Gas Diffuser, **Std.**
	046-52-003	Insulator/Gas Diffuser, High Temp.
6.	160-08-402	Contact Tip Holder, M8, **Std.**
	160-06-402	Contact Tip Holder, M6
7.	160-08-404	Contact Tip Holder, Long, M8, Flush
	160-06-404	Contact Tip Holder, Long, M6, Flush
8.	064-52-002	Insulating Washer
9.	060-52-180	Swan Neck, 180°
	060-52-022	Swan Neck, 22°
	060-52-045	Swan Neck, 45°
10.	285-01-001	Handle Screw
11.	170-52-016	Barrel Handle
11a.	260-52-200	Support Spring Collar
12.	350-61-095	Hose Clamp w/ Bridge, 9.5mm
13.	350-60-087	Hose Clamp, 8.7mm

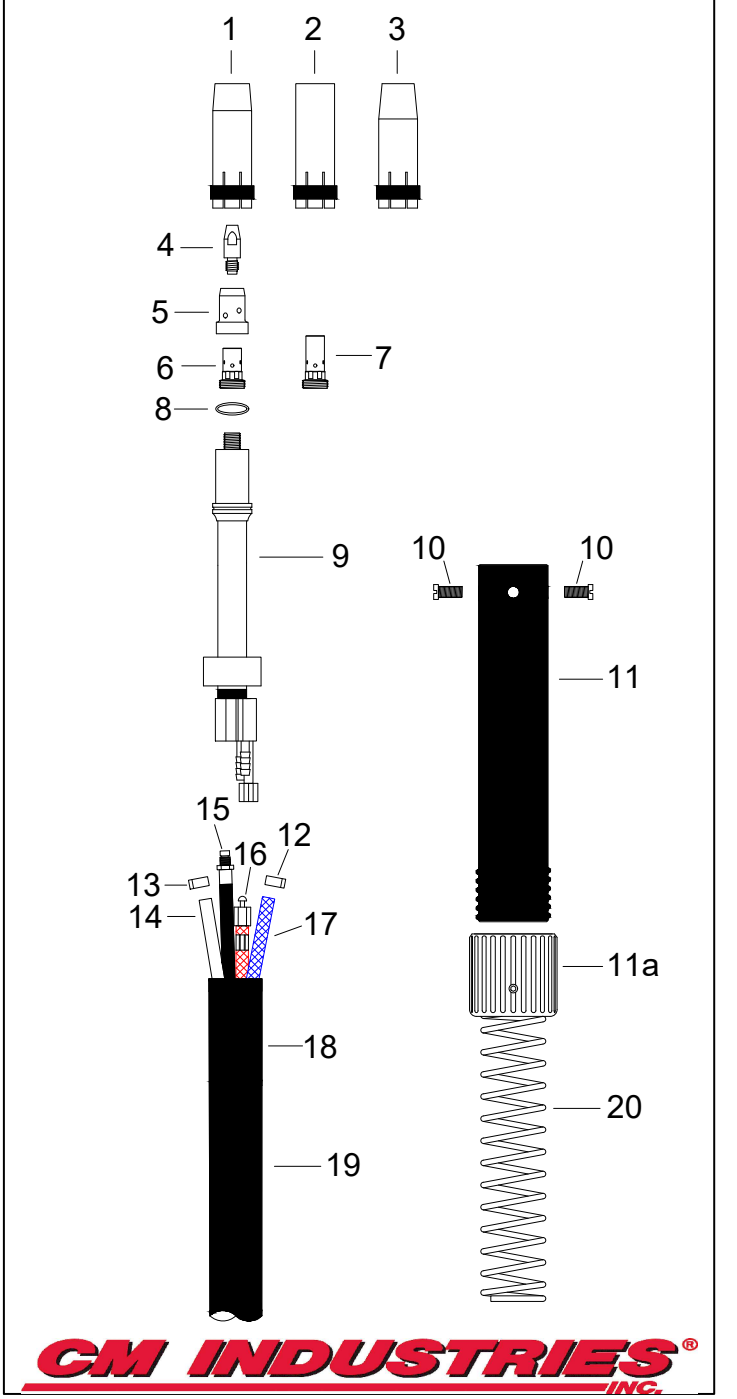

CM INDUSTRIES® INC.

COPYRIGHT © 2025 CM INDUSTRIES, INC. ALL RIGHTS RESERVED

#	Part Number	Description
	Items 14-19 are available in lengths 4, 6, 8, 10, 12, and 15 feet	
14.	310-55-0xx	Gas Hose
15.	235-52-0xx	Wire Conduit
16.	225-52-0xx	Power Cable
17.	310-52-0xx	Water Hose, IN, Blue
18.	216-52-0xx	Outer Cable Cover
19.	215-52-0xx	Cable Assembly
20.	185-52-001	Cable Support Spring
21.	260-52-202	Adaptor Support
22.	285-01-001	Adaptor Support Screw
23.	310-53-002	Water Hose, OUT, Red, 2'
24.	401-00-001	Adaptor Nut
25.	401-02-052	Adaptor Block, Euro
26.	285-00-002	O-Ring, Adaptor Block
27.	350-52-001	Male Water Fitting
28.	350-60-095	Hose Clamp, 9.5mm
29.	401-02-057	Gun Plug Assy., Tweco/Linc. LF & Power Feed
30.	C224	O-Ring, Tweco
31.	401-01-004	Liner Retainer Plug
32.	401-02-056	Gun Plug Assembly, Lincoln LN
33.	B8631	Gun Hose Nipple
34.	401-02-054	Gun Plug Assembly, Miller
35.	079-974	O-Ring, Miller
36.	401-01-002	Liner Nut, Miller
37.	401-01-001	Liner Retaining Nut
38.	241-02-016	Liner #2, 15' .035"-.045"
	241-03-016	Liner #3, 15' .052"-1/16"
	241-04-016	Liner #4, 15' 5/64"-3/32"
	241-02-027	Liner #2, 25' .035"-.045"
	241-03-027	Liner #3, 25' .052"-1/16"
	241-04-027	Liner #4, 25' 5/64"-3/32"
39.	255-10-010	Teflon Liner Red, 10' .035"-.045"
	255-10-012	Teflon Liner Red, 12' .035"-.045"
	255-10-015	Teflon Liner Red, 15' .035"-.045"
	255-05-010	Teflon Liner Yellow, 10' .045"-1/16"
	255-05-012	Teflon Liner Yellow, 12' .045"-1/16"
	255-05-015	Teflon Liner Yellow, 15' .045"-1/16"
40.	259-05-001	Repl. Collet, for Yellow Teflon Liner
	259-10-001	Repl. Collet, for Red Teflon Liner
41.	285-00-003	Repl. O-Ring
	Additional Items	
42.	350-65-002	Female Quick Disconnect
43.	350-65-005	Female Quick Disconnect w/ Panel Mount

Not Pictured:
See Page 155 for Water Hose Extension Kits

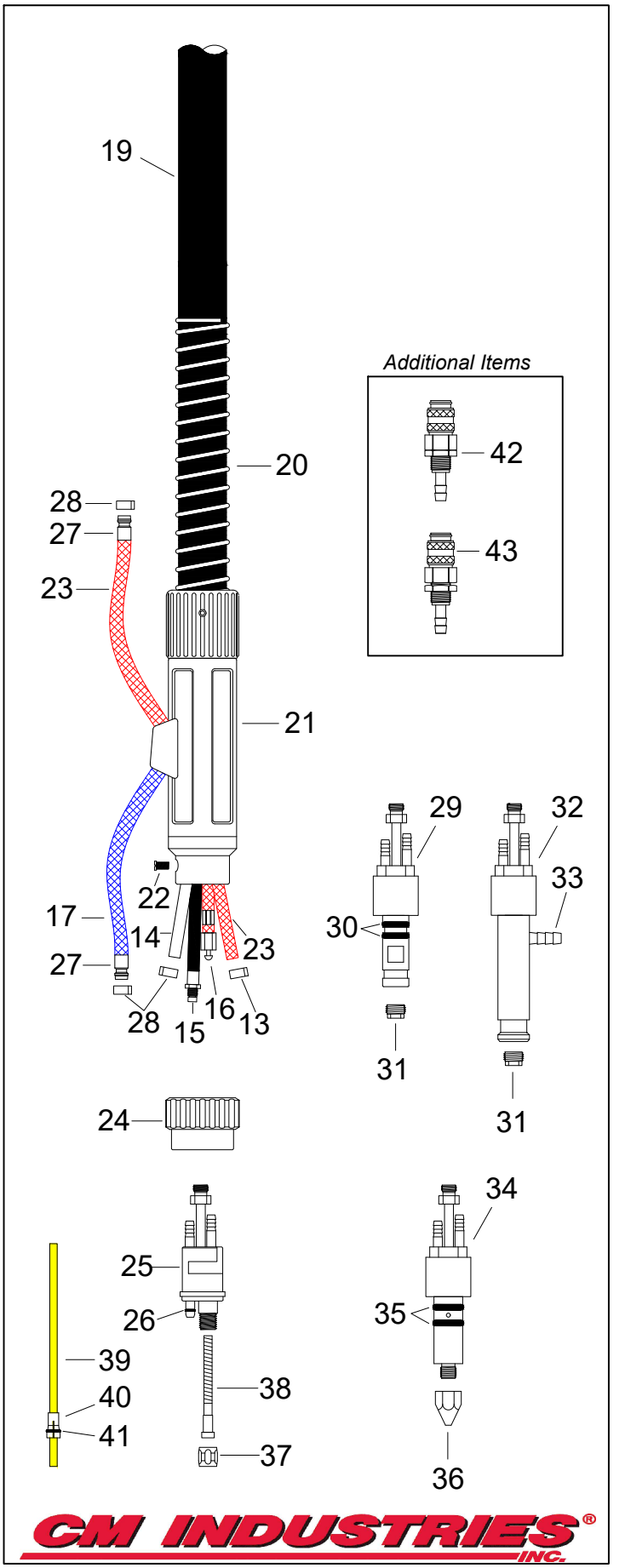

COPYRIGHT © 2025 CM INDUSTRIES, INC. ALL RIGHTS RESERVED

TRG 400AUTO

AIR-COOLED MIG GUN

Replacement Suitable for Tregaskiss®

R M 41 15 - 116 - 22

Gun Model
- **R** CM Industries Tregaskiss™ Compatible

Power Pin
- **(blank)** Tweco® 4
- **TW** Tweco® 5
- **L** Lincoln® LN
- **LF** Lincoln® LF/Power Feed
- **LPM** Lincoln® Power MIG
- **M** Miller®
- **PA** Panasonic®
- **E** Euro

Amperage
- **41** 400 Amps

Length
- **04** 4 ft. (3.05m)
- **06** 6 ft. (4.57m)
- **08** 8 ft. (2.44m)
- **10** 10 ft. (3.05m)
- **12** 12 ft. (3.66m)
- **15** 15 ft. (4.57m)
- **20** 20 ft. (6.16m)
- **25** 25 ft. (7.63m)

Wire Size
- **30** .030″ 0.8mm (400 Amp only)
- **35** .035″ 0.9mm
- **40** .040″ 1.0mm
- **45** .045″ 1.2mm Aluminum
- **364** 3/64″ 1.3mm
- **52** .052″ 1.4mm
- **116** 1/16″ 1.6mm
- **564** 5/64″ 2.0mm Aluminum
- **332** 3/32″ 2.4mm (500 Amp only)

Neck
- **(blank)** 180° (std.)
- **22** 22°
- **45** 45°
- **60** 60°

#	Part Number	Description
1.	R401-42-50	Nozzle, 1/2", Bottleneck, 1/8" Tip Recess
	R401-48-50	Nozzle, 1/2", Bottleneck, 1/8" Tip Stickout
	R401-48-62	Nozzle, H.D., 5/8", Bottleneck, Flush Tip
	R401-5-50	Nozzle, H.D., 1/2", 1/4" Tip Recess
	R401-5-62	Nozzle, H.D., 5/8", 1/4" Tip Recess
	R401-5-75	Nozzle, H.D., 3/4", 1/4" Tip Recess
	R401-6-50	Nozzle, H.D., 1/2", 1/8" Tip Recess
	R401-6-62	Nozzle, H.D., 5/8", 1/8" Tip Recess, **Std.**
	R401-6-75	Nozzle, H.D., 3/4", 1/8" Tip Recess
	R401-7-62	Nozzle, H.D., 5/8", 1/4" Tip Recess, Brass
	R401-7-75	Nozzle, H.D., 3/4", 1/4" Tip Recess, Brass
	R401-7-87	Nozzle, H.D., 7/8", 1/4" Tip Recess, Brass
	R401-8-62	Nozzle, 5/8", 1/8" Tip Stickout, Short Arc
	R401-81-62	Nozzle, H.D., 5/8", 1/8" Tip Stickout, Short Arc
	CM "Taper-LOCK" Contact Tips	
2.	155-1-030	H.D. Contact Tip, .030" (0.8mm)
	155-1-035	H.D. Contact Tip, .035" (0.9mm)
	155-1-040	H.D. Contact Tip, .040" (1.0mm)
	155-1-045	H.D. Contact Tip, .045" (1.2mm)
	155-1-364	H.D. Contact Tip, 3/64" (1.2mm)
	155-1-052	H.D. Contact Tip, .052" (1.4mm)
	155-1-062	H.D. Contact Tip, .062" (1.6mm)
	155-1-564	H.D. Contact Tip, 5/64" (2.0mm)
3.	155-2-030	H.D. Tapered Contact Tip, .030" (0.8mm)
	155-2-035	H.D. Tapered Contact Tip, .035" (0.9mm)
	155-2-040	H.D. Tapered Contact Tip, .040" (1.0mm)
	155-2-045	H.D. Tapered Contact Tip, .045" (1.2mm)
	155-2-364	H.D. Tapered Contact Tip, 3/64" (1.2mm)
	155-2-052	H.D. Tapered Contact Tip, .052" (1.4mm)
	155-2-062	H.D. Tapered Contact Tip, .062" (1.6mm)
4.	154-R505	H.D. Diffuser, for CM Taper-LOCK™ Tips, **Std.**
5.	154-1	Repl. Retaining Ring
6.	154-2	Repl. O-Ring
7.	154-R506	Tapered Diffuser, for CM Taper-LOCK™ Tips
8.	R402-11	Gooseneck Insulator
9.	R405-180	Gooseneck w/ Body, 180°, **Std.**
	R405-22	Gooseneck w/ Body, 22°
	R405-45	Gooseneck w/ Body, 45°
	R405-60	Gooseneck w/ Body, 60°

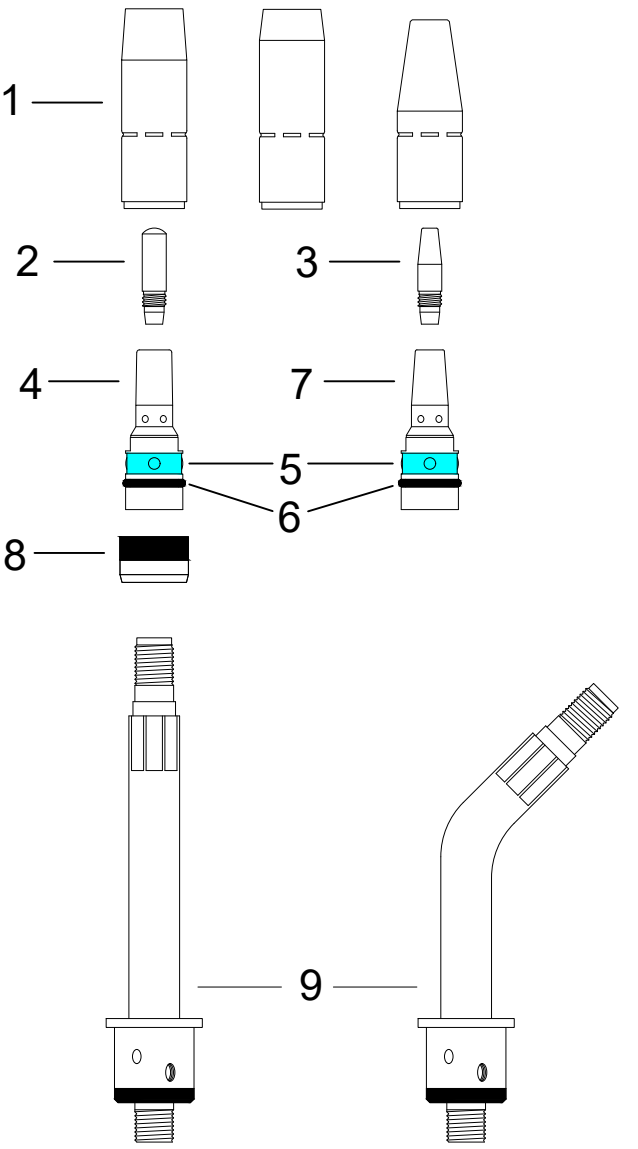

CM INDUSTRIES® INC.

COPYRIGHT © 2025 CM INDUSTRIES, INC. ALL RIGHTS RESERVED

#	Part Number	Description
10.	R408	Connector Cone
11.	R409	Cone Nut
12.	R413-5	Inner Tube Clamp
13.	R413-1	Outer Jacket Clamp
14.	R410-11	Mounting Screw, Automatic
15.	R410-10	Front Housing, Automatic
16.	R513-2	Repl. Spring Guard, Front & Rear
17.	R413-04AU	Unicable Assembly w/ Springs, 4'
	R413-06AU	Unicable Assembly w/ Springs, 6'
	R413-08AU	Unicable Assembly w/ Springs, 8'
	R413-10AU	Unicable Assembly w/ Springs, 10'
	R413-12AU	Unicable Assembly w/ Springs, 12'
	R413-15AU	Unicable Assembly w/ Springs, 15'
18.	B2520041-S	Repl. Strain Relief Spring
19.	B2520066	Strain Relief Kit
20.	R414-400CM	Power Pin Block
21.	R214	Power Pin, Tweco #4
22.	R414-1	Repl. O-Ring, Tweco #4
23.	C44C	Liner Set Screw
24.	R214-1	Power Pin w/ O-Rings, Miller
25.	R414-11-2	Repl. O-Ring, Miller
26.	R214-116	Power Pin Cap, Miller .035"-1/16" Wire
	R214-332	Power Pin Cap, Miller 5/64"-3/32" Wire
27.	R214-2	Power Pin, Lincoln LN
28.	B8631	Repl. Gas Hose Nipple
29.	401-00-001	Adaptor Nut
30.	R425-10CM	Power Pin, Euro
31.	285-00-002	O-Ring, Euro
32.	R415-35-6	Liner Assembly, 6', .035"-.045"
	R415-116-6	Liner Assembly, 6', .045"-1/16"
	R415-35-15	Liner Assembly, 15', .035"-.045"
	R415-116-15	Liner Assembly, 15', .045"-1/16"
	R415-564-15	Liner Assembly, 15', 1/16-5/64"
	R415-35-2	Liner Assembly, 15', .035"-3/64" Aluminum
	R415-116-2	Liner Assembly, 15', 3/64"-1/16" Aluminum
	R415-35-0	Teflon Liner Assy., 15', .035"-3/64" Aluminum
	R415-116-0	Teflon Liner Assy., 15', 3/64"-1/16" Aluminum

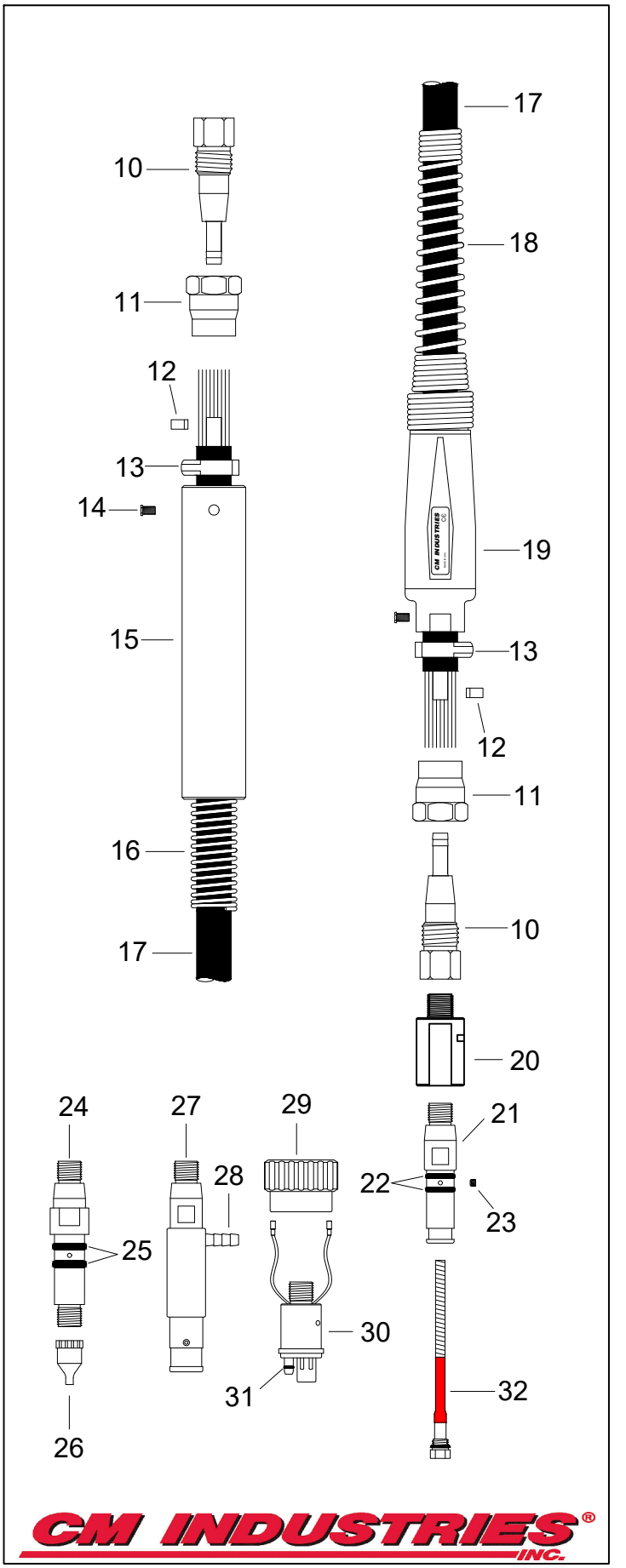

COPYRIGHT © 2025 CM INDUSTRIES, INC. ALL RIGHTS RESERVED

TRG 500AUTO

AIR-COOLED MIG GUN

Replacement Suitable for Tregaskiss®

R M 51 15 - 116 - 22

Gun Model
- **R** CM Industries Tregaskiss™ Compatible

Power Pin
- **(blank)** Tweco® 4
- **TW** Tweco® 5
- **L** Lincoln® LN
- **LF** Lincoln® LF/Power Feed
- **LPM** Lincoln® Power MIG
- **M** Miller®
- **PA** Panasonic®
- **E** Euro

Amperage
- **51** 500 Amps

Length
- **04** 4 ft. (3.05m)
- **06** 6 ft. (4.57m)
- **08** 8 ft. (2.44m)
- **10** 10 ft. (3.05m)
- **12** 12 ft. (3.66m)
- **15** 15 ft. (4.57m)
- **20** 20 ft. (6.16m)
- **25** 25 ft. (7.63m)

Wire Size
- **30** .030″ 0.8mm (400 Amp only)
- **35** .035″ 0.9mm
- **40** .040″ 1.0mm
- **45** .045″ 1.2mm Aluminum
- **364** 3/64″ 1.3mm
- **52** .052″ 1.4mm
- **116** 1/16″ 1.6mm
- **564** 5/64″ 2.0mm Aluminum
- **332** 3/32″ 2.4mm (500 Amp only)

Neck
- **(blank)** 180° (std.)
- **22** 22°
- **45** 45°
- **60** 60°

#	Part Number	Description
1.	R401-4-38	Nozzle, 3/8", Flush Tip
	R401-4-50	Nozzle, 1/2", 1/8" Tip Recess
	R401-4-62	Nozzle, 5/8", 1/8" Tip Recess
	R401-4-75	Nozzle, 3/4", 1/8" Tip Recess
	R401-42-50	Nozzle, 1/2", Bottleneck, 1/8" Tip Recess
	R401-48-50	Nozzle, 1/2", Bottleneck, 1/8" Tip Stickout
	R401-5-50	Nozzle, H.D., 1/2", 1/4" Tip Recess
	R401-5-62	Nozzle, H.D., 5/8", 1/4" Tip Recess
	R401-5-75	Nozzle, H.D., 3/4", 1/4" Tip Recess
	R401-6-50	Nozzle, H.D., 1/2", 1/8" Tip Recess
	R401-6-62	Nozzle, H.D., 5/8", 1/8" Tip Recess, **Std.**
	R401-6-75	Nozzle, H.D., 3/4", 1/8" Tip Recess
	R401-7-62	Nozzle, H.D., 5/8", 1/4" Tip Recess, Brass
	R401-7-75	Nozzle, H.D., 3/4", 1/4" Tip Recess, Brass
	R401-7-87	Nozzle, H.D., 7/8", 1/4" Tip Recess, Brass
	R401-8-62	Nozzle, 5/8", 1/8" Tip Stickout, Short Arc
	R401-81-62	Nozzle, H.D., 5/8", 1/8" Tip Stickout, Short Arc
	CM "Taper-LOCK" Contact Tips	
2.	155-1-030	H.D. Contact Tip, .030" (0.8mm)
	155-1-035	H.D. Contact Tip, .035" (0.9mm)
	155-1-040	H.D. Contact Tip, .040" (1.0mm)
	155-1-045	H.D. Contact Tip, .045" (1.2mm)
	155-1-364	H.D. Contact Tip, 3/64" (1.2mm)
	155-1-052	H.D. Contact Tip, .052" (1.4mm)
	155-1-062	H.D. Contact Tip, .062" (1.6mm)
	155-1-564	H.D. Contact Tip, 5/64" (2.0mm)
	155-1-332	H.D. Contact Tip, 3/32" (2.4mm)
3.	155-2-030	H.D. Tapered Contact Tip, .030" (0.8mm)
	155-2-035	H.D. Tapered Contact Tip, .035" (0.9mm)
	155-2-040	H.D. Tapered Contact Tip, .040" (1.0mm)
	155-2-045	H.D. Tapered Contact Tip, .045" (1.2mm)
	155-2-364	H.D. Tapered Contact Tip, 3/64" (1.2mm)
	155-2-052	H.D. Tapered Contact Tip, .052" (1.4mm)
	155-2-062	H.D. Tapered Contact Tip, .062" (1.6mm)
4.	154-R505	H.D. Diffuser, for Taper-LOCK™ Tips, **Std.**
5.	154-1	Repl. Retaining Ring
6.	154-2	Repl. O-Ring
7.	154-R506	Tapered Diffuser, for Taper-LOCK™ Tips
8.	R402-11	Gooseneck Insulator
9.	R505-180	Gooseneck w/ Body, 180°, **Std.**
	R505-22	Gooseneck w/ Body, 22°
	R505-45	Gooseneck w/ Body, 45°
	R505-60	Gooseneck w/ Body, 60°

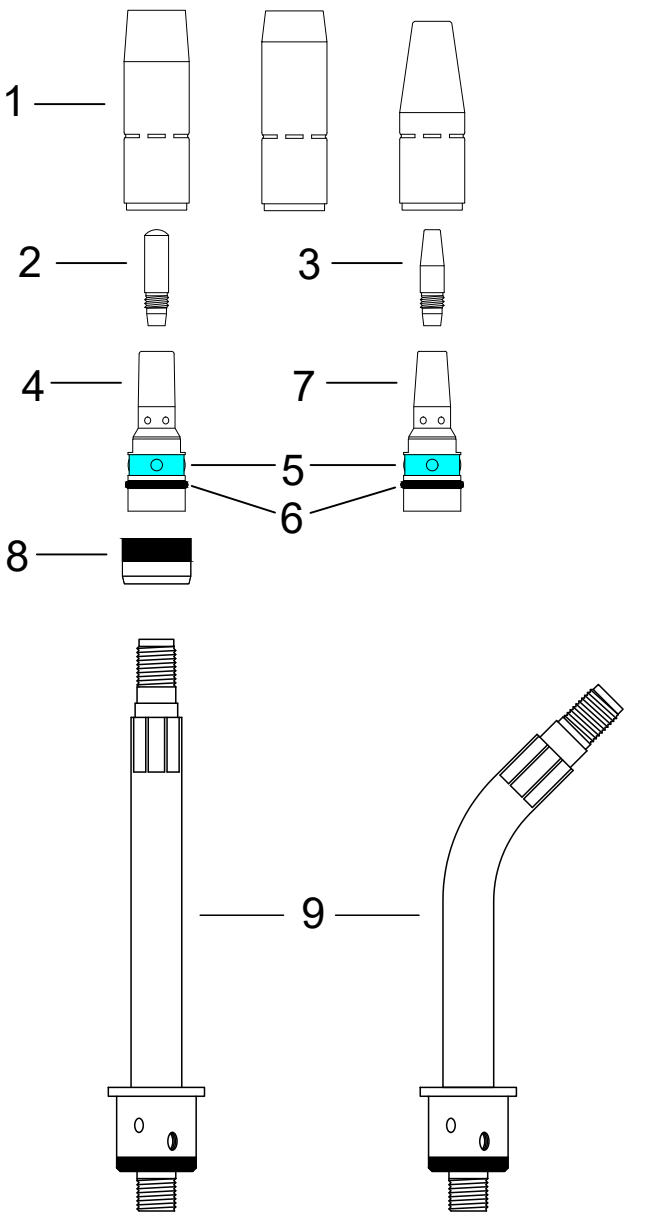

CM INDUSTRIES® INC.

COPYRIGHT © 2025 CM INDUSTRIES, INC. ALL RIGHTS RESERVED

#	Part Number	Description
10.	R408	Connector Cone
11.	R509	Cone Nut
12.	R413-5	Inner Tube Clamp
13.	R513-1	Outer Jacket Clamp
14.	R410-11	Mounting Screw, Automatic
15.	R410-10	Front Housing, Automatic
16.	R513-2	Repl. Spring Guard, Front & Rear
17.	R513-04AU	Unicable Assembly w/ Springs, 4'
	R513-06AU	Unicable Assembly w/ Springs, 6'
	R513-08AU	Unicable Assembly w/ Springs, 8'
	R513-10AU	Unicable Assembly w/ Springs, 10'
	R513-12AU	Unicable Assembly w/ Springs, 12'
	R513-15AU	Unicable Assembly w/ Springs, 15'
18.	B2520041-S	Repl. Strain Relief Spring
19.	B2520066	Strain Relief Kit
20.	R414-400CM	Power Pin Block
21.	R214	Power Pin, Tweco #4
22.	R414-1	O-Ring, Tweco #4
23.	C44C	Liner Set Screw
24.	R214-1	Power Pin w/ O-Rings, Miller
25.	R414-11-2	O-Ring, Miller
26.	R214-116	Power Pin Cap, Miller .035"-1/16" Wire
	R214-332	Power Pin Cap, Miller 5/64"-3/32" Wire
27.	R214-2	Power Pin, Lincoln LN
28.	B8631	Repl. Gas Hose Nipple
29.	401-00-001	Adaptor Nut
30.	R425-10CM	Power Pin, Euro
31.	285-00-002	O-Ring, Euro
32.	R415-35-6	Liner Assembly, 6', .035"-.045"
	R415-116-6	Liner Assembly, 6', .045"-1/16"
	R415-35-15	Liner Assembly, 15', .035"-.045"
	R415-116-15	Liner Assembly, 15', .045"-1/16"
	R415-564-15	Liner Assembly, 15', 1/16-5/64"
	R415-332-15	Liner Assembly, 15', 5/64-3/32"
	R415-35-2	Liner Assembly, 15', .035"-3/64" Aluminum
	R415-116-2	Liner Assembly, 15', 3/64"-1/16" Aluminum
	R415-35-0	Teflon Liner Assy., 15', .035"-3/64" Aluminum
	R415-116-0	Teflon Liner Assy., 15', 3/64"-1/16" Aluminum

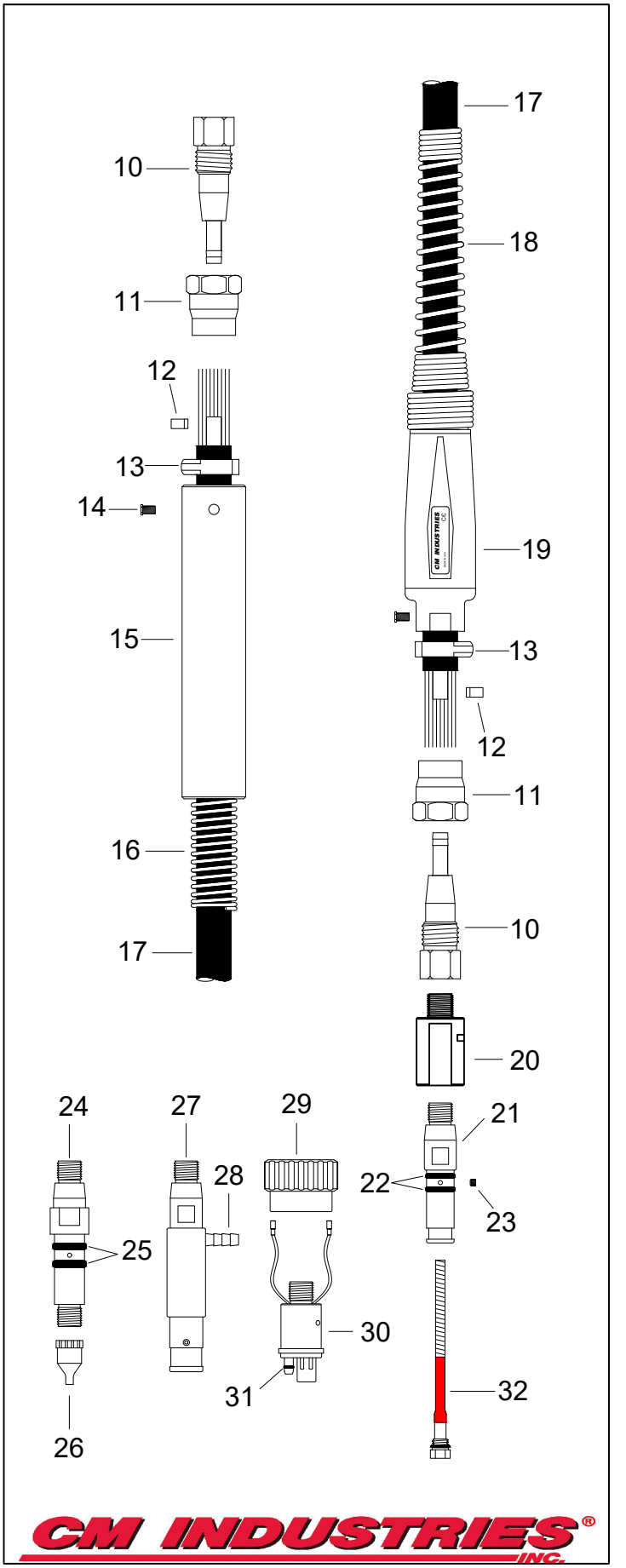

COPYRIGHT © 2025 CM INDUSTRIES, INC. ALL RIGHTS RESERVED

TRG 450W AUTO WATER-COOLED MIG GUN

Replacement Suitable for Tregaskiss®

RATING	GUN ORDERING PART NUMBER		GUN PLUG Direct Connect
	.045"	1/16"	
450 Amp CO2 @ 80% Duty Cycle	R46xx-45	R46xx-116	**Tweco® #4**
325 Amp Mixed Gas @ 80% Duty Cycle	RLN46xx-45	RLN46xx-116	**Lincoln® LN**
	RLF46xx-45	RLF46xx-116	**Lincoln® LF/ Power Feed**
Wire Capacity: 0.030" (0.8mm) - 5/64" (2.0mm)	RM46xx-45	RM46xx-116	**Miller®**
	xx = Standard lengths of 4, 6, 8, 10, 12, and 15 ft. Custom lengths also available.		

#	Part Number	Description
1.	R401-5-62	Nozzle, H.D., 5/8", 1/4" Tip Recess
	R401-5-75	Nozzle, H.D., 3/4", 1/4" Tip Recess
	R401-6-50	Nozzle, H.D., 1/2", 1/8" Tip Recess
	R401-6-62	Nozzle, H.D., 5/8", 1/8" Tip Recess, **Std.**
	R401-6-75	Nozzle, H.D., 3/4", 1/8" Tip Recess
	R401-7-62	Nozzle, H.D., 5/8", 1/4" Tip Recess, Brass
	R401-7-75	Nozzle, H.D., 3/4", 1/4" Tip Recess, Brass
	R401-7-87	Nozzle, H.D., 7/8", 1/4" Tip Recess, Brass
	R401-81-62	Nozzle, H.D., 5/8", 1/8" Tip Stickout, Short Arc
	R401-48-62	Nozzle, H.D., 5/8", Bottleneck, Flush Tip
	CM "Taper-LOCK" Contact Tips	
2.	155-1-030	H.D. Contact Tip, .030" (0.8mm)
	155-1-035	H.D. Contact Tip, .035" (0.9mm)
	155-1-040	H.D. Contact Tip, .040" (1.0mm)
	155-1-045	H.D. Contact Tip, .045" (1.2mm)
	155-1-364	H.D. Contact Tip, 3/64" (1.2mm)
	155-1-052	H.D. Contact Tip, .052" (1.4mm)
	155-1-062	H.D. Contact Tip, .062" (1.6mm)
	155-1-564	H.D. Contact Tip, 5/64" (2.0mm)
3.	155-2-030	H.D. Tapered Contact Tip, .030" (0.8mm)
	155-2-035	H.D. Tapered Contact Tip, .035" (0.9mm)
	155-2-040	H.D. Tapered Contact Tip, .040" (1.0mm)
	155-2-045	H.D. Tapered Contact Tip, .045" (1.2mm)
	155-2-364	H.D. Tapered Contact Tip, 3/64" (1.2mm)
	155-2-052	H.D. Tapered Contact Tip, .052" (1.4mm)
	155-2-062	H.D. Tapered Contact Tip, .062" (1.6mm)
4.	154-R505	Diffuser H.D., for Taper-LOCK™ Tip, **Std.**
4a.	154-R506	Tapered Diffuser, for CM Taper-LOCK™ Tips
5.	154-1	Repl. Retaining Ring
6.	154-2	Repl. O-Ring
7.	R458-1	Neck Insulator
8.	R455-45	Neck Assy., 45°
	R455-60	Neck Assy., 60°
	R455-180	Neck Assy., 180°, **Std.**

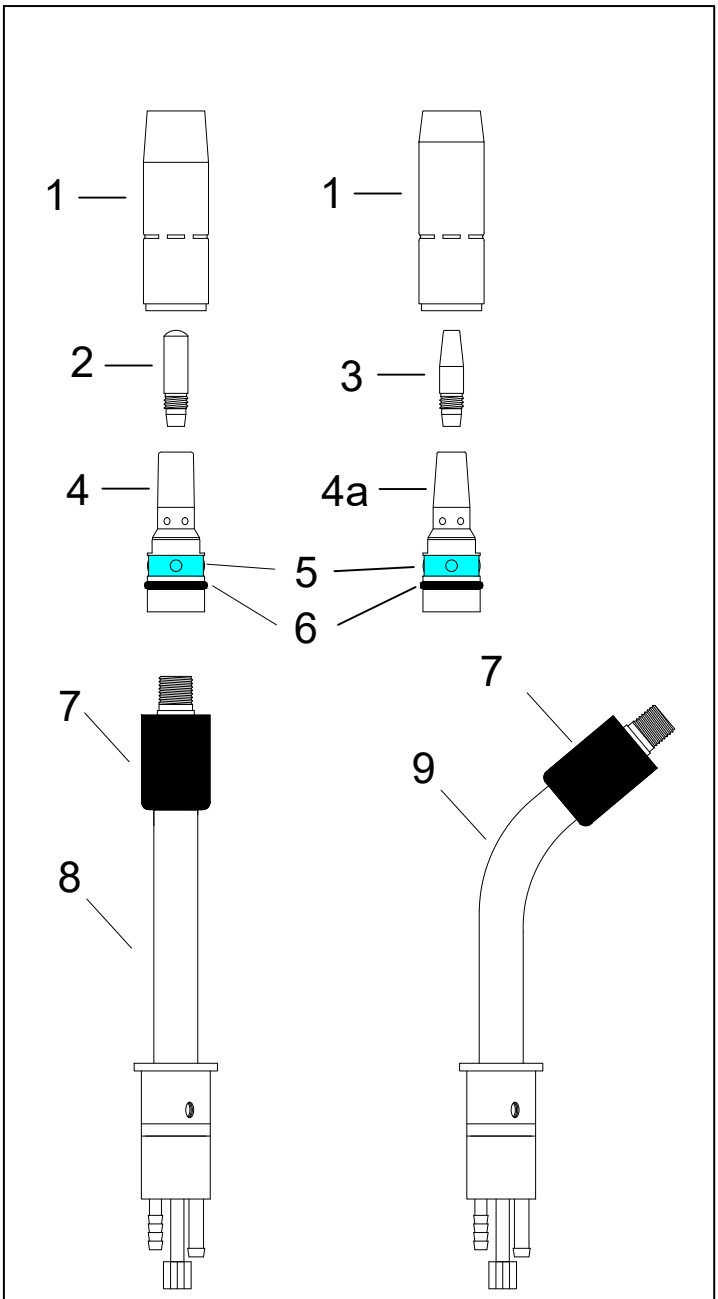

CM INDUSTRIES® INC.

COPYRIGHT © 2025 CM INDUSTRIES, INC. ALL RIGHTS RESERVED

#	Part Number	Description
9.	R410-11	Mounting Screw
10.	R410-10T	Handle
11.	R410-10AN	Spring Adapter Nut
12.	185-52-001	Spring Guard
13.	R663-1-10	Cable Cover, 10'
	R663-1-12	Cable Cover, 12'
	R663-1-15	Cable Cover, 15'
	R663-1-20	Cable Cover, 20'
	R663-1-25	Cable Cover, 25'
14.	R659-10	Power Cable, 10'
	R659-12	Power Cable, 12'
	R659-15	Power Cable, 15'
	R659-20	Power Cable, 20'
	R659-25	Power Cable, 25'
15.	R656-10	Water Hose, 10'
	R656-12	Water Hose, 12'
	R656-15	Water Hose, 15'
	R656-20	Water Hose, 20'
	R656-25	Water Hose, 25'
16.	R656-1	Hose Clamp
17.	R657	Conduit (sold per ft.)
18.	R657-1	Conduit Clamp
19.	R610	Handle
20.	R416-5	Control Housing Only
21.	R411-3	Mounting Screw
22.	R664-400	Quick Connector Power Block Assembly
23.	R658-1	Blue Water Line IN, 2'
24.	R658	Red Water Line OUT, 2'
25.	350-52-001	Male Water Fitting
26.	R664-1	Power Pin, Tweco #4, Lincoln LF/ Power Feed
27.	R664-16	Power Pin, Lincoln LN
28.	B8631	Repl. Gas Hose Nipple
29.	R664-11-116	Power Pin, Miller
30.	R414-11-2	Repl. O-Ring, Miller
31.	R214-116	Power Pin Cap, Miller .035"-1/16" Wire
	R214-332	Power Pin Cap, Miller 5/64"-3/32" Wire
32.	R415-30-15	Liner Assembly, 15', .030"
	R415-35-15	Liner Assembly, 15', .035"-.045"
	R415-116-15	Liner Assembly, 15', .045"-1/16"
	R415-564-15	Liner Assembly, 15', 1/16-5/64"
	R415-35-2	Liner Assembly, 15', .035"-3/64" Aluminum
	R415-116-2	Liner Assembly, 15', 3/64"-1/16" Aluminum
	R415-35-0	Teflon Liner Assy., 15', .035"-3/64", Aluminum
	R415-116-0	Teflon Liner Assy., 15', 3/64"-1/16", Aluminum

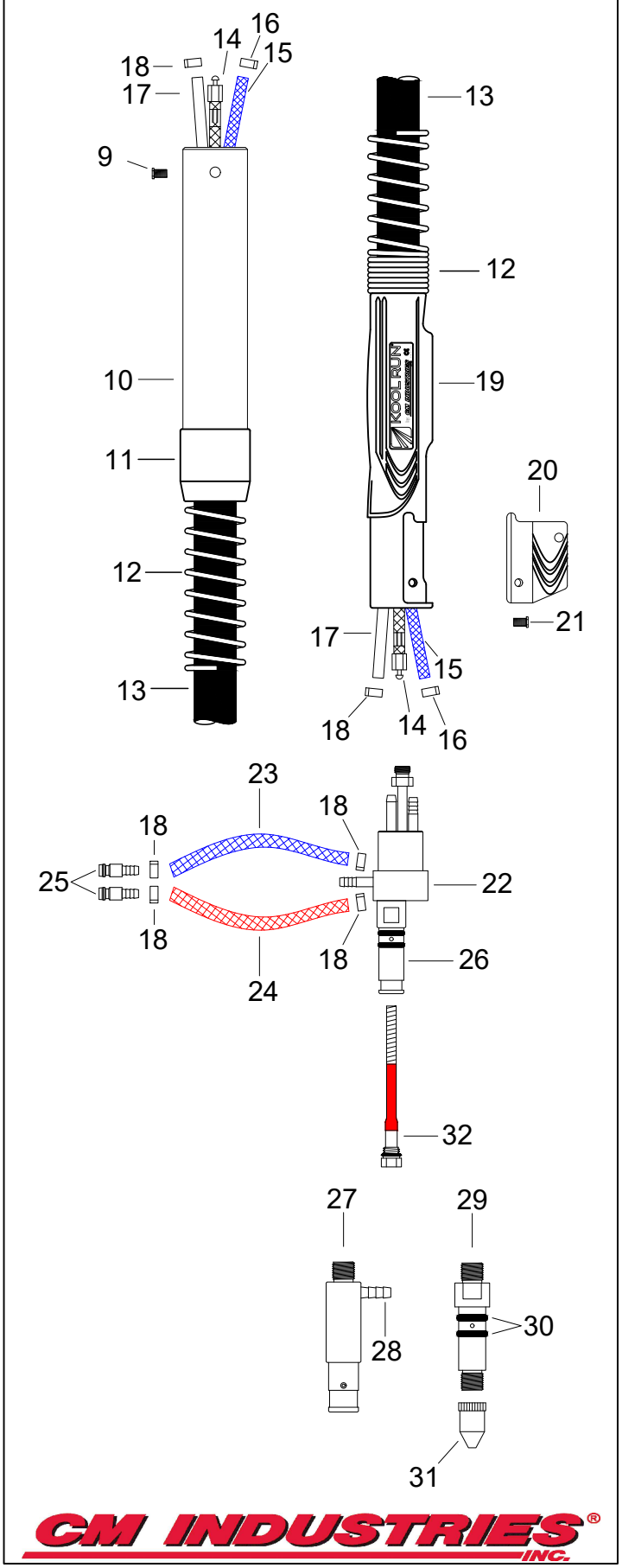

COPYRIGHT © 2025 CM INDUSTRIES, INC. ALL RIGHTS RESERVED

TWC 400AUTO AIR-COOLED MIG GUN

Replacement Suitable for Tweco®

RATING	GUN ORDERING PART NUMBER		GUN PLUG Direct Connect
	.035"-.045"	1/16"	
400 Amp CO2 @ 80% Duty Cycle 300 Amp Mixed Gas @ 80% Duty Cycle Wire Capacity: 0.030" (0.8mm) - 5/64" (2.0mm)	CTAM4xx-3545 CMTAM4xx-3545 CLTAM4xx-3545 CXTAM4xx-3545	CTAM4xx-116 CMTAM4xx-116 CLTAM4xx-116 CXTAM4xx-116	**Tweco® #4, Linc.® LF & PF** **Miller®** **Lincoln® LN** **Euro**
	xx = Standard lengths of 10, 12, 15, 20 and 25 ft. Custom lengths also available.		

#	Part Number	Description
1.	C24CT-50-S	Nozzle, Coarse Thread, 1/2" I.D.
2.	C24CT-62-S	Nozzle, Coarse Thread, 5/8" I.D., **Std.**
3.	C24CT-75-S	Nozzle, Coarse Thread, 3/4" I.D.
4.	C34CT	Nozzle Inuslator, **Std.**
5.	C14H-35	Contact Tip, H.D., .035" 0.9mm
	C14H-40	Contact Tip, H.D., .040" 1.0mm
	C14H-45	Contact Tip, H.D., .045" 1.2mm
	C14H-52	Contact Tip, H.D., .052" 1.4mm
	C14H-116	Contact Tip, H.D., 1/16" 1.6mm
	C14H-564	Contact Tip, H.D., 5/64" 2.0mm
	C14AH-364	Contact Tip, H.D., Aluminum, 3/64"
	C14AH-116	Contact Tip, H.D., Aluminum, 1/16"
6.	C54A	Gas Diffuser, **Std.**
7.	C64TAM-N	TWC400 AUTO Body 6", **Std.**
8.	C64STAM-N	TWC400 AUTO Body 3", Short
9.	C185	Connector Case w/ Screws & Posts
10.	C125FM	Repl. Binder Post & Screw
11.	C104	Cable Connector Block Assembly
12.	C134-14	Power Cable Clamp
13.	C234-12S	Cable Support, Spring 12"
14.	C400	Power Cable, Bulk or Per Foot
15.	C350R-230-10S	Cable Support Spring
16.	CM170-4H	Connector Plug Adaptor
17.	CR6RC	Round Connector Case
18.	C350-174H	Gun Plug, Tweco #4, Lincoln LF & Power Feed
19.	C224	O-Ring
20.	C44C	Set Screw
21.	C350-174MH	Gun Plug, Miller
22.	C174M-N	Conduit Nut, Miller
23.	C350-174LH	Gun Plug, Lincoln LN
24.	B8631	Gas Hose Nipple
25.	C44-3545-15	Liner Assembly, 15', .035"-.045", **Std.**
	C44-116-15	Liner Assembly, 15', .052"-1/16"
	C44-564-15	Liner Assembly, 15', 5/64"
	C44-3545-25	Liner Assembly, 25', .035"-.045"
	C44-116-25	Liner Assembly, 25', .052"-1/16"
	C44-564-25	Liner Assembly, 25', 5/64"
26.	C64TAM-174	TWC400 AUTO Body 6", Direct Mount
27.	C64STAM-174	TWC400 AUTO Short Body 3", Direct Mount
28.	C44-3545-1	Liner Assembly, 1', .035"-.045"
	C44-116-1	Liner Assembly, 1', .052"-1/16"
	C44-564-1	Liner Assembly, 1', 5/64"

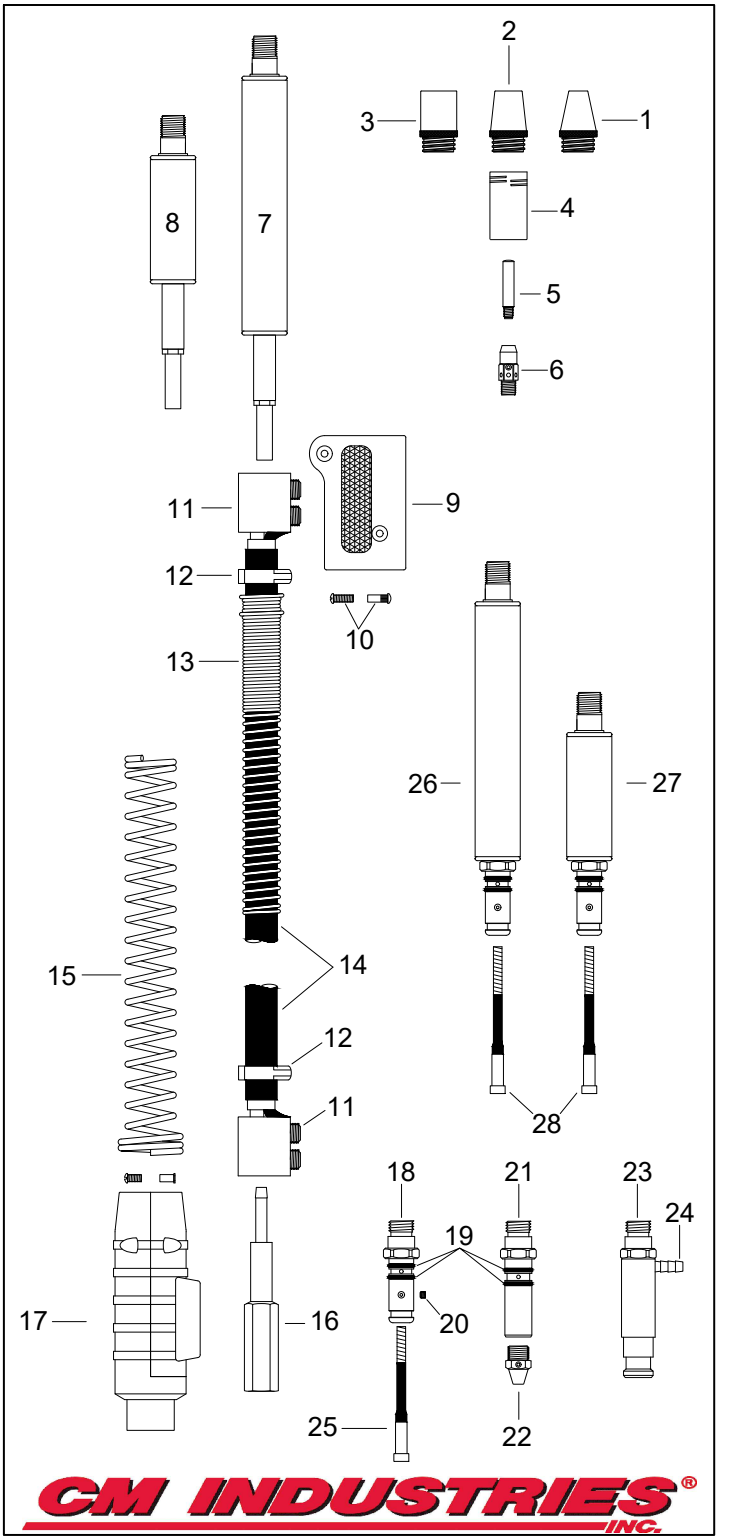

CM INDUSTRIES® INC.

COPYRIGHT © 2025 CM INDUSTRIES, INC. ALL RIGHTS RESERVED

TWC 500AUTO AIR-COOLED MIG GUN

Replacement Suitable for Tweco®

RATING	GUN ORDERING PART NUMBER		GUN PLUG Direct Connect
	1/16"	3/32"	
500 Amp CO2 @ 80% Duty Cycle 400 Amp Mixed Gas @ 80% Duty Cycle Wire Capacity: 0.035" (0.9mm) - 7/64" (2.8mm)	CTAM5xx-116 CXTAM5xx-116 CLTAM5xx-116 CMTAM5xx-116	CTAM5xx-332 CXTAM5xx-332 CLTAM5xx-332 CMTAM5xx-332	**Tweco® #5** **Euro** **Lincoln® LN** **Miller®**
	xx = Standard lengths of 10, 12, 15, 20 and 25 ft. Custom lengths also available.		

#	Part Number	Description
1.	C25CT-50-S	Nozzle, Coarse Thread, 1/2" I.D.
2.	C25CT-62-S	Nozzle, Coarse Thread, 5/8" I.D.
3.	C25CT-75-S	Nozzle, Coarse Thread, 3/4" I.D.
4.	C35CT	Nozzle Inuslator, **Std.**
5.	C15H-35	Contact Tip, H.D., .035" 0.9mm
	C15H-40	Contact Tip, H.D., .040" 1.0mm
	C15H-45	Contact Tip, H.D., .045" 1.2mm
	C15H-52	Contact Tip, H.D., .052" 1.4mm
	C15H-116	Contact Tip, H.D., 1/16" 1.6mm
	C15H-564	Contact Tip, H.D., 5/64" 2.0mm
	C15H-332	Contact Tip, H.D., 3/32" 2.4mm
	C15H-764	Contact Tip, H.D., 7/64" 2.8mm
6.	C15HFC-45	Contact Tip, H.D., .045" 1.2mm
	C15HFC-52	Contact Tip, H.D., .052" 1.4mm
	C15HFC-116	Contact Tip, H.D., 1/16" 1.6mm
	C15HFC-564	Contact Tip, H.D., 5/64" 2.0mm
	C15HFC-332	Contact Tip, H.D., 3/32" 2.4mm
	C15HFC-764	Contact Tip, H.D., 7/64" 2.8mm
7.	C55SW	Gas Diffuser, .035"-1/16"
	C55	Gas Diffuser, 5/64"
	C55H	Gas Diffuser, 3/32"-7/64"
8.	C65TAM-N	TWC500 AUTO Body 6", **Std.**
9.	C65STAM-N	TWC500 AUTO Body 3", Short
10.	C185	Connector Case w/ Screws
11.	C125FM	Binder Post & Screw
12.	C104	Cable Connector Block Assembly
13.	C134-16	Power Cable Clamp
14.	C235-6S	Cable Support, Spring 6"
15.	C500	Power Cable, Per Foot
16.	C350R-230-10S	Cable Support Spring
17.	CM170-5H	Connector Plug Adaptor
18.	CR6RC	Round Connector Case
19.	C176S-H	Gun Plug, Tweco #5
20.	C225	O-Ring For #5
21.	C44C	Set Screw
22.	CEL176-MH	Gun Plug, Miller
23.	C224	O-Ring
24.	C175M-N	Conduit Nut, Miller
25.	CEL176-LH	Gun Plug, Lincoln LN
26.	B8631	Gas Hose Nipple
27.	C45-3545-15	Liner Assembly, 15', .035"-.045"
	C45-116-15	Liner Assembly, 15', .052"-1/16"
	C45-564-15	Liner Assembly, 15', 5/64"
	C45H-332-15	Liner Assembly, 15', 3/32"
	C45H-764-15	Liner Assembly, 15', 7/64"
28.	C65TAM-175	TWC500 AUTO Body, Direct Mount
29.	C65STAM-175	TWC500 AUTO Short Body, Direct Mount
30.	C45-3545-1	Liner Assembly, 1', .035"-.045"
	C45-116-1	Liner Assembly, 1', .052"-1/16"
	C45-564-1	Liner Assembly, 1', 5/64"
	C45H-332-1	Liner Assembly, 1', 3/32"
	C45H-764-1	Liner Assembly, 1', 7/64"

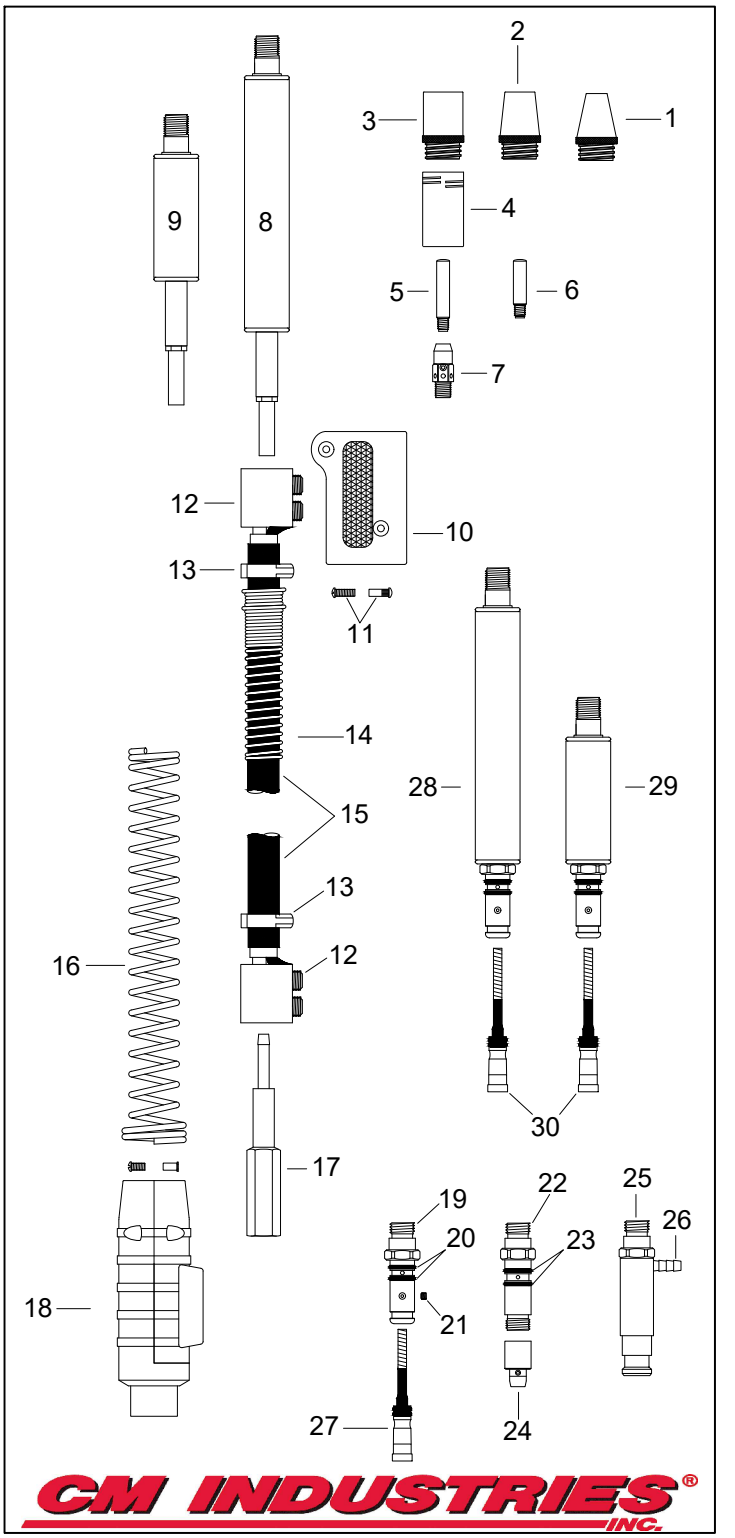

COPYRIGHT © 2025 CM INDUSTRIES, INC. ALL RIGHTS RESERVED



COPYRIGHT © 2025 CM INDUSTRIES, INC. ALL RIGHTS RESERVED





Robotics

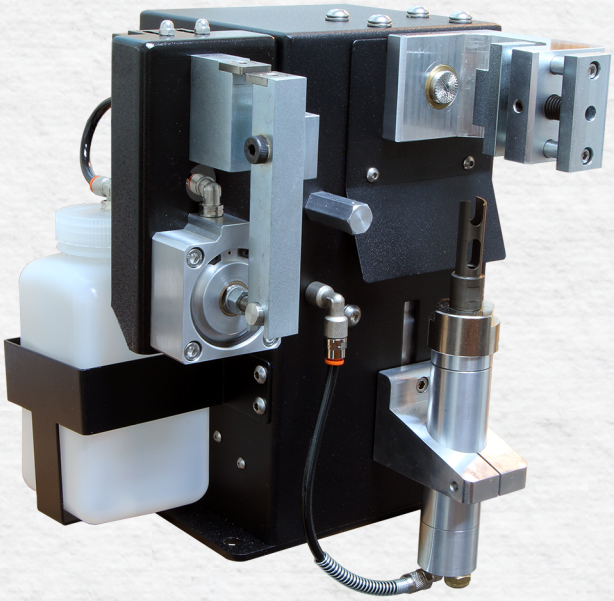

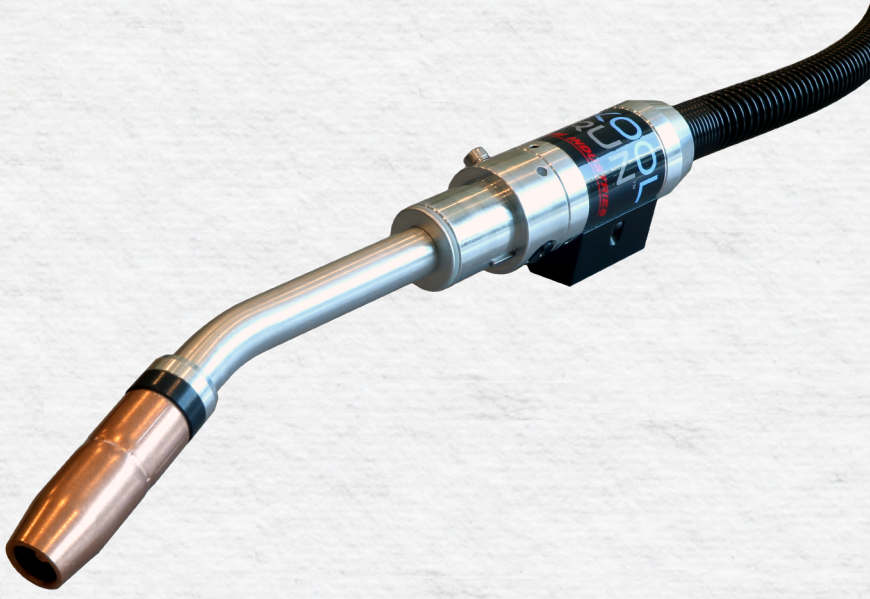

COPYRIGHT © 2025 CM INDUSTRIES, INC. ALL RIGHTS RESERVED

KR502

KOOL RUN®
Driven by Performance



Kool Run Over-The-Arm - KR502

- Compatible with popular conventional style robot models
- Rugged design for long service life
- Keyed mounting arms for TCP repeatability and accuracy
- Quick-change neck and cable assemblies for easy maintenance
- Lengths from 3ft to 15ft

Consumable Advantage

- Kool Run Taper-Lock consumables are made from the highest quality raw materials and deliver industry-leading performance to meet the demand of high-production applications
- Contact tip hole diameters are manufactured to 50% tighter tolerances than industry standards
- Superior electrical and heat transfer results in increased service life, consistent performance, and substantially lower operating costs



Torch Amperage Ratings

Kool Run Torch Model	100% Duty Cycle		60% Duty Cycle	
	CO2	Mixed Gas	CO2	Mixed Gas
KR502	500 AMP	**350 AMP**	600 AMP	**500 AMP**

COPYRIGHT © 2025 CM INDUSTRIES, INC. ALL RIGHTS RESERVED

Ordering Information

Kool Run™ KR502 Series Robotic MIG Torches

KR2 A S 50 45 J 5 1 E M

Torch Model

2nd Gen 500 Amp
External Arm Robot

Type

Air-Cooled

Mount

C - Clutch Mount
S - Solid Mount

Length

30 - 3 ft
35 - 3.5 ft
40 - 4 ft
45 - 4.5 ft
50 - 5 ft
55 - 5.5 ft
60 - 6 ft
70 - 7 ft
80 - 8 ft
90 - 9 ft
10 - 10 ft
12 - 12 ft
15 - 15 ft

Neck

22 - 22° Bend
45 - 45° Bend
18 - 180° Straight

Note: Lengths available in 1/2 ft increments

Nozzle

Light Duty Conical
A - 1/2" I.D., 1/8" Tip Recess
B - 5/8" I.D., 1/8" Tip Recess
C - 1/2" I.D., 1/4" Tip Recess
D - 1/2" I.D., Flush Tip
E - 1/2" I.D., 1/8" Tip Stickout
F - 5/8" I.D., 1/8" Tip Stickout
G - 1/2" I.D., 1/4" Tip Stickout

Heavy Duty Conical
N - 1/2" I.D., 1/8" Tip Recess
O - 5/8" I.D., 1/8" Tip Recess
P - 5/8" I.D., 1/4" Tip Recess
Q - 5/8" I.D., Flush Tip
R - 5/8" I.D., 1/8" Tip Stickout
S - 5/8" I.D., 1/4" Tip Stickout

Light Duty Bottleneck
I - 1/2" I.D., 1/8" Tip Recess
J - 1/2" I.D., Flush Tip
K - 1/2" I.D., 1/8" Tip Stickout
L - 1/2" I.D., 1/4" Tip Stickout

Heavy Duty Bottleneck
U - 5/8" I.D., 1/8" Tip Recess
V - 5/8" I.D., Flush Tip
W - 5/8" I.D., 1/8" Tip Stickout

Gas Diffuser

5 - HD, Slip-On
6 - Tapered, Slip-On
7 - HD, Thread-On
8 - Tapered, Thread-On

Contact Tip

1 - 155-1-xxx
2 - 155-2-xxx
3 - 155-3-xxx
7 - 155-7-xxx

Wire Size

A - .030"
B - .035"
C - .040"
D - .045"
E - 3/64"
F - .052"
G - 1/16"
H - 5/64"
I - 3/32"

Power Pin

M- Miller
R - Lincoln "4R"
P - Panasonic
T - Tweco #4
W- Tweco #5
O- OTC / Daihen
F - Fronius
E- Euro

COPYRIGHT © 2025 CM INDUSTRIES, INC. ALL RIGHTS RESERVED

Technical Data

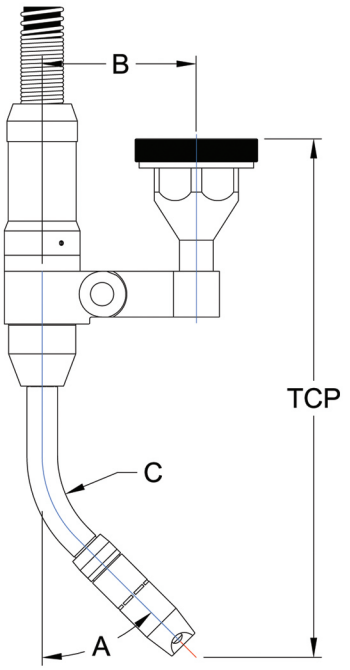

-TCP-

Neck	A	TCP	B	C
KR502-22	22°	13.572” (344.7mm)	6.010” (152.7mm)	3.00” (76.2mm)
KR502-45	45°	13.360” (339.3mm)	3.960” (100.6mm)	3.00” (76.2mm)
KR502-180	180°	13.867” (352.2mm)	4.070” (103.4mm)	-

-Torch Amperage Ratings-

Kool Run Torch Model	100% Duty Cycle		60% Duty Cycle	
	CO2	Mixed Gas	CO2	Mixed Gas
KR502	500 AMP	350 AMP	600 AMP	500 AMP

NOTE: Ratings are based on tests that comply with NEMA ARC Welding Section Standard 11-6-1975 for Duty Cycle. The time period of one complete cycle shall be 10 minutes (60%=6 minutes) National Electrical Manufacturers Association 2101 L Street N.W. Washington D.C. 20037.

Insulating Discs

PART #	DESCRIPTION
KCM-000	Blank
KCM-603	KUKA® KR15, KR16, KR16 S, KR16 KS REIS® RV4, RV6, RV6L
KCM-604	ABB® RB6, 1400, 1500, 1600, 2000, 4000, IRB1000-3200 Fanuc® 100, 100i, 120i, s-6, M710-20L Kawasaki® JS6, JS10 KUKA® KR5 arc, KR6, KR6 arc, KR6 KS, KR16 L6, KR16 l6 arc, KR16 LS KS Miller® MRV6 Motoman® HP6, HP20, HP50-20, K6, K10, SK6, SK10, SK16 OTC® DR4000, DR-4200, DR-4400, EX-V6, EX-V6L, EX-V16, MRV-6
KCM-606	Fanuc® Arcmate JR / SR
KCM-608	ABB® IRB2400/10, IRB2400/16, IRB2600, IRB440L
KCM-612	Kawasaki® FA06
KCM-614	REIS® RV12 / 122 / 15
KCM-616	Panasonic® AW10A/6A Panasonic® VR6/8, TA, TW
KCM-623	Miller® MRV5, MRH5
KCM-629	OTC® DR3000
KCM-632	Fanuc® ArcMate 50iB, 50iC, 50il KUKA® KR5 R1400
KCM-648	Nachi® SC15
KCM-649	ABB® 4400 M94A
KCM-654	Panasonic® VR32

-Important Dimensions for Mounting-

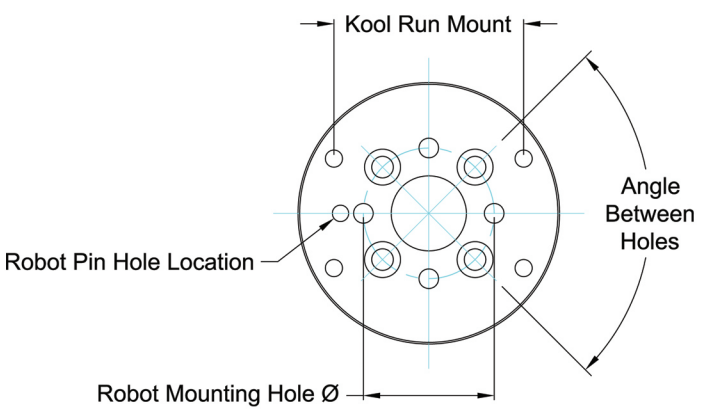

COPYRIGHT © 2025 CM INDUSTRIES, INC. ALL RIGHTS RESERVED

Exploded View & Parts List

ITEM	PART #	DESCRIPTION
1.	152-xx-xxP	See Page 7 **"Plated Nozzle Selection"**
2.	155-x-xxx	See Page 6 **"Contact Tip Selection"**
3.	154-R50x	See Page 6 **"Gas Diffuser Selection"**
4.	KR50-1	Neck Insulator
5.	KR502-22	Neck, 22°
	KR502-45	Neck, 45°
	KR502-180	Neck, 180°
6.	KR502-3	Neck O-Ring
7.	KAM-422	Mounting Arm, 22° Gooseneck
	KAM-423	Mounting Arm, 45° Gooseneck
	KAM-424	Mounting Arm, 180° Gooseneck
8.	*Not Sellable*	M8x1.25x12 SHCS
9.	KR-120	Torch Body
10.	KCM-400	Solid Mount
11.	KCM-202	Safety Clutch
12.	KCM-205	Safety Clutch Cable
13.	*Not Sellable*	M4x0.7x12 SHCS
14.	*Not Sellable*	Varied SHCS
15.	KCM-xxx	See Page 114 "Insulating Discs"
16.	KR10-xxx	500A Cable Assembly, for Clutch Mount
	KR10-xxxE	500A Cable Assembly, for Clutch Mount w/ Euro
	KR1-xxx	500A Cable Assembly, for Solid Mount
	KR1-xxxE	500A Cable Assembly, for Solid Mount w/ Euro
		All cable assemblies are available in 1/2' increments up to 15'
17.	KR1-500-10	Clutch Cable Housing
18.	KR1-500-7	Clutch Cable Plug
19.	KR1-500-8	O-Ring
20.	KR1-500-11	Set Screw
21.	650-25-260	Connector Terminal
22.	650-25-363	Control Cable - 6' (2 m)
	650-25-283	Control Cable - 13' (4 m)
23.	KDP-001	Power Pin Adaptor Block
24.	KDP-101	Power Pin, Miller®
	KDP-103	Power Pin, Panasonic®
	KDP-104	Power Pin, Tweco® #4
	KDP-105	Power Pin, Tweco® #5
	KDP-106	Power Pin, OTC®
	KDP-107	Power Pin, Fronius®
	KDP-108	Power Pin, Lincoln "4R"
	KDP-110	Euro Connector
25.	164-30-6	Liner, 6', .030"
	164-45-6	Liner, 6', .035" - .045"
	164-116-6	Liner, 6', 3/64" - 1/16"
	164-332-6	Liner, 6', 5/64" - 3/32"
	164-30-10	Liner, 10', .030"
	164-45-10	Liner, 10', .035" - .045"
	164-116-10	Liner, 10', 3/64" - 1/16"
	164-332-10	Liner, 10', 5/64" - 3/32"
	164-30-15	Liner, 15', .030"
	164-45-15	Liner, 15', .035" - .045"
	164-116-15	Liner, 15', 3/64" - 1/16"
	164-332-15	Liner, 15', 5/64" - 3/32"

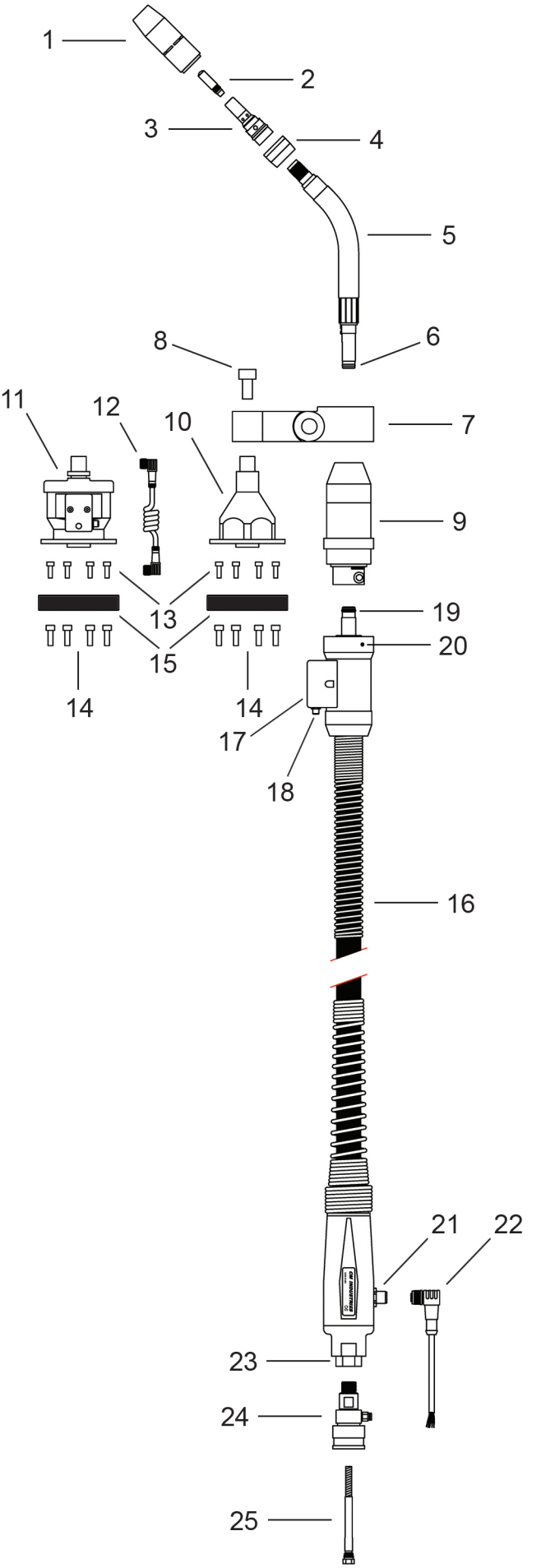

COPYRIGHT © 2025 CM INDUSTRIES, INC. ALL RIGHTS RESERVED

KR502HW

KOOL RUN®
Driven by Performance



Kool Run Hollow Wrist - KR502HW

- Compatible for hollow wrist robots
- Rated for 500 Amp
- TCP repeatability and accuracy
- Rugged design for long life
- EZ-Turn Hollow Wrist Body reduces cable assembly stress and eliminates rotational restrictions

Consumable Advantage

- Kool Run Taper-Lock consumables are made from the highest quality raw materials and delivery industry leading performances to meet the demand of high production applications
- Contact tip hole diameters are manufactured with tighter tolerances than industry standards
- Superior electrical and heat transfer results in increased service life, consistent performances, and substantially lower operating costs

Torch Amperage Ratings

Kool Run Torch Model	100% Duty Cycle		60% Duty Cycle	
	CO2	Mixed Gas	CO2	Mixed Gas
KR502HW	500 AMP	350 AMP	600 AMP	500 AMP

COPYRIGHT © 2025 CM INDUSTRIES, INC. ALL RIGHTS RESERVED

Ordering Information

Kool Run® KR502HW Series Robotic MIG Torches

Torch Model	Type	Robot Make & Model	Neck	Nozzle	Gas Diffuser	Contact Tip	Wire Size	Power Pin
H2	A	F7	45	K	6	1	A	R F

Type

- **A** Solid Mount
- **B** Solid Mount + Wire Brake
- **C** Clutch Mount
- **D** Clutch Mount + Wire Brake
- **S** Solid Mount Fixed Rotation
- **T** Clutch Mount Fixed Rotation

Robot Make & Model

ABB
- **A1** IRB 1600ID
- **A2** IRB 2600ID 1.65
- **A3** IRB 2600ID 1.85
- **A4** IRB 1660ID

Fanuc
- **F1** 100iC, 100iC/12
- **F2** 100iC/6L, 100iC/7L
- **F3** 120iC
- **F4** 120iC/10L, 120iC/12L
- **F5** 100iC/8L
- **F6** M-710iC/12L
- **F7** 100iD
- **F8** 100iD/10L
- **F9** 120iD
- **G1** 120iD/12L
- **G2** 100iD/8L

KUKA
- **K1** KR 5 HW
- **K2** KR 16 L8 HW
- **K3** KR 16 HW
- **K4** KR 8 R1420 / R1620 HW
- **K5** KR 6 R1820 HW
- **K6** KR 8 R2100 HW

Motoman
- **M1** EA1400, MA1400
- **M2** EA1900, MA1900
- **M3** MA3100
- **M4** MA1440, AR1440
- **M5** MA2010, AR2010
- **M6** EA1400N

OTC
- **D1** AX-MV4 AP
- **D2** AX-MV4L AP
- **D3** FD-B4
- **D4** FD-B4L
- **D5** FD-B6
- **D6** FD-B6L

XX - Designates a letter and number for custom applications

Neck

Air-Cooled
- **22** 22° KR502-22
- **45** 45° KR502-45
- **18** 180° KR502-180
- **23** 22°, Long KR502-22L1
- **46** 45°, Long KR502-45L1
- **24** 22°, X-Long KR502-22L2
- **47** 45°, X-Long KR502-45L2

X.KOOL
- **X1** 22° KR512-22
- **X2** 45° KR512-45
- **X3** 180° KR512-180
- **X4** 22° KR512-22L1
- **X5** 45° KR512-45L1
- **X6** 22° KR512-22L2
- **X7** 45° KR512-45L2
- **48** 45° for G1 KR502-48 337mm TCP

XX - Designates a letter and number for custom applications

Nozzle

Light Duty Conical
- **A** 1/2″, 1/8″ Tip Recess
- **B** 5/8″, 1/8″ Tip Recess
- **C** 1/2″, 1/4″ Tip Recess
- **D** 1/2″, Flush Tip
- **E** 1/2″, 1/8″ Tip Stickout
- **F** 5/8″, 1/8″ Tip Stickout
- **G** 1/2″, 1/4″ Tip Stickout

Light Duty Bottleneck
- **I** 1/2″, 1/8″ Tip Recess
- **J** 1/2″, Flush Tip
- **K** 1/2″, 1/8″ Tip Stickout
- **L** 1/2″, 1/4″ Tip Stickout

Heavy Duty Conical
- **N** 1/2″, 1/8″ Tip Recess
- **O** 5/8″, 1/8″ Tip Recess
- **P** 5/8″, 1/4″ Tip Recess
- **Q** 5/8″, Flush Tip
- **R** 5/8″, 1/8″ Tip Stickout
- **S** 5/8″, 1/4″ Tip Stickout

Heavy Duty Bottleneck
- **U** 5/8″, 1/8″ Tip Recess
- **V** 5/8″, Flush Tip
- **W** 5/8″, 1/8″ Tip Stickout

- **X** Custom Nozzle

Gas Diffuser
- **5** 154-R505
- **6** 154-R506
- **7** 154-R507
- **8** 154-R508

Contact Tip
- **1** 155-1-xxx
- **2** 155-2-xxx
- **3** 155-3-xxx
- **7** 155-7-xxx

Wire Size
- **A** .030″
- **B** .035″
- **C** .040″
- **D** .045″
- **E** 3/64″
- **F** .052″
- **G** .062″
- **H** 5/64″
- **I** 3/32″

Aluminum App w/ Teflon Liner
- **P** .035″ Al
- **Q** 3/64″ Al
- **R** .062″ Al

Aluminum App w/ Teflon Liner & Steel Jumper
- **U** .035″ Al
- **V** 3/64″ Al
- **W** .062″ Al

Power Pin
- **A** Lincoln® AutoDrive® S
- **E** Euro
- **F** Fronius®
- **M** Miller®
- **O** OTC® / Daihen®
- **P** Panasonic®
- **R** Lincoln® “4R”
- **T** Tweco® #4
- **W** Tweco® #5

Liner Type
- **F** Front Load™
- **_** Conventional (leave blank)

Brand and product names shown above are trademarks of their respective owners.

Subject to Change – The information presented in this spec sheet is accurate to the best of our knowledge at the time of printing. Please visit CMIndustries.com for the most up-to-date information.

COPYRIGHT © 2025 CM INDUSTRIES, INC. ALL RIGHTS RESERVED

Technical Data

TCP Dimensions & Std. Neck Options

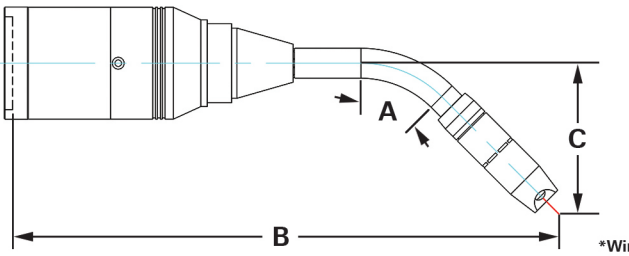

Solid Mount

NECK	A	B	C
KR502-180	180°	15.057″ [382.4]	-
KR502-22	22°	15.519″ [394.2]	3.960″ [100.6]
KR502-45	45°	14.370″ [365.0]	3.960″ [100.6]
KR502-22L1	22°	16.920″ [430.0]	3.960″ [100.6]
KR502-45L1	45°	15.748″ [400.0]	3.960″ [100.6]
KR502-22L2	22°	18.890″ [480.0]	3.960″ [100.6]
KR502-45L2	45°	17.717″ [450.0]	3.960″ [100.6]

Solid Mount w/ Wire Brake

NECK	A	B	C
KR502-180	180°	16.238″ [412.4]	-
KR502-22	22°	16.700″ [424.2]	3.960″ [100.6]
KR502-45	45°	15.551″ [395.0]	3.960″ [100.6]
KR502-22L1	22°	16.920″ [460.0]	3.960″ [100.6]
KR502-45L1	45°	16.930″ [430.0]	3.960″ [100.6]
KR502-22L2	22°	20.070″ [510.0]	3.960″ [100.6]
KR502-45L2	45°	18.352″ [480.0]	3.960″ [100.6]

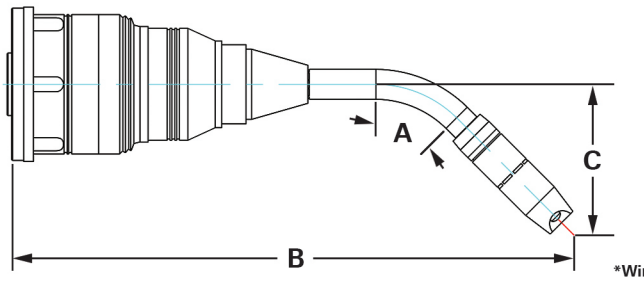

Clutch Mount

NECK	A	B	C
KR502-180	180°	15.451″ [392.4]	-
KR502-22	22°	15.913″ [404.2]	3.960″ [100.6]
KR502-45	45°	14.764″ [375.0]	3.960″ [100.6]
KR502-22L1	22°	17.314″ [440.0]	3.960″ [100.6]
KR502-45L1	45°	16.142″ [410.0]	3.960″ [100.6]
KR502-22L2	22°	19.284″ [490.0]	3.960″ [100.6]
KR502-45L2	45°	18.111″ [460.0]	3.960″ [100.6]

Clutch Mount w/ Wire Brake

NECK	A	B	C
KR502-180	180°	16.632″ [422.4]	-
KR502-22	22°	17.094″ [434.2]	3.960″ [100.6]
KR502-45	45°	15.945″ [405.0]	3.960″ [100.6]
KR502-22L1	22°	18.495″ [470.0]	3.960″ [100.6]
KR502-45L1	45°	17.323″ [440.0]	3.960″ [100.6]
KR502-22L2	22°	20.465″ [520.0]	3.960″ [100.6]
KR502-45L2	45°	19.292″ [490.0]	3.960″ [100.6]

Installing the X.KOOL™ Neck

X.KOOL™

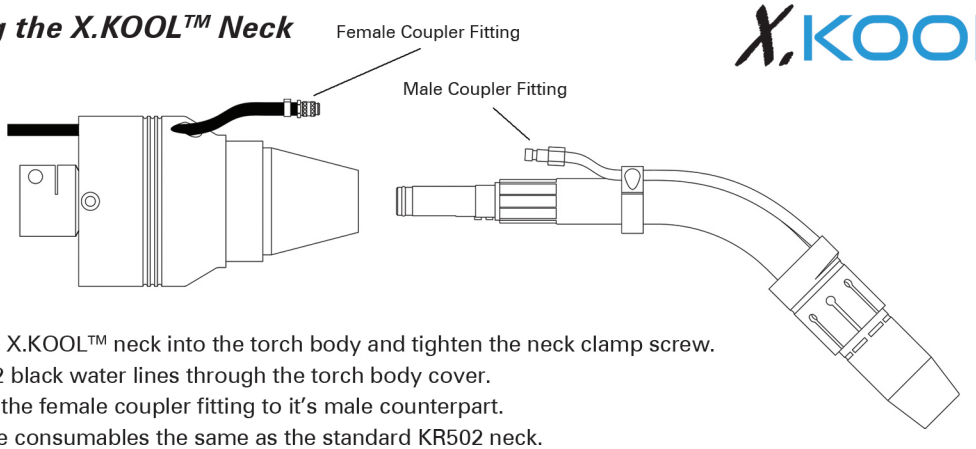

- Slide the X.KOOL™ neck into the torch body and tighten the neck clamp screw.
- Pull the 2 black water lines through the torch body cover.
- Connect the female coupler fitting to it's male counterpart.
- Install the consumables the same as the standard KR502 neck.

COPYRIGHT © 2025 CM INDUSTRIES, INC. ALL RIGHTS RESERVED

Power Cable and Liner Selection

KOOL-RUN® Power Cables for Solid Mount & Wire Brake Systems

KHW-A160	Cable Assembly, ABB IRB 1600ID
KHW-A166	Cable Assembly, ABB IRB 1660ID
KHW-A261	Cable Assembly, ABB IRB 2600ID 1.65
KHW-A262	Cable Assembly, ABB IRB 2600ID 1.85
KHW-F100	Cable Assembly, Fanuc 100iC, 100iC/12
KHW-F100-6L	Cable Assembly, Fanuc 100iC/6L, 100iC/7L
KHW-F100-8L	Cable Assembly, Fanuc 100iC/8L
KHW-F120	Cable Assembly, Fanuc 120iC
KHW-F120-10L	Cable Assembly, Fanuc 120iC/10L,120iC/12L
KHW-F10D	Cable Assembly, Fanuc 100iD
KHW-F10D-8	Cable Assembly, Fanuc 100iD/8L
KHW-F10D-10	Cable Assembly, Fanuc 100iD/10L
KHW-F12D	Cable Assembly, Fanuc 120iD
KHW-F12D-12	Cable Assembly, Fanuc 120iD/L
KHW-M140	Cable Assembly, Motoman EA / MA1400
KHW-M144	Cable Assembly, Motoman MA1440
KHW-M201	Cable Assembly, Motoman MA2010

KOOL-RUN® Power Cables for Clutch Systems

KHC-A160	Clutch Cable Assy, ABB IRB 1600ID
KHC-A261	Clutch Cable Assy, ABB IRB 2600ID 1.65
KHC-A262	Clutch Assembly, ABB IRB 2600ID 1.85
KHC-M140	Clutch Cable Assy, Motoman MA1400
KHC-M144	Clutch Cable Assy, Motoman EA / MA1400
KHC-M190	Clutch Cable Assy, Motoman EA / MA1900
KHC-M310	Clutch Cable Assy, Motoman MA3100
KHC-M14N	Clutch Assembly, Motoman EA1400N
KHC-OMV4	Clutch Cable Assy, OTC AX MV4AP/MV4LAP
KHC-OB41	Clutch Cable Assy, OTC All B4
KHC-OB42	Clutch Cable Assy, OTC All B4L

KOOL-RUN® Power Cables for X.KOOL Systems

KHX-A160	XK Cable Assembly, ABB IRB 1600ID
KHX-A261	XK Cable Assembly, ABB IRB 2600ID 1.65
KHX-A262	XK Cable Assembly, ABB IRB 2600ID 1.85
KHX-F100	XK Cable Assembly, Fanuc 100iC, 100iC/12
KHX-F100-6L	XK Cable Assembly, Fanuc 100iC/6L, 100iC/7L
KHX-F100-8L	XK Cable Assembly, Fanuc 100iC/8L
KHX-F10D	XK Cable Assembly, Fanuc 100iD
KHX-F10D-8	XK Cable Assembly, Fanuc 100iD/8L
KHX-F10D-10	XK Cable Assembly, Fanuc 100iD/10L
KHX-F120	XK Cable Assembly, Fanuc 120iC
KHX-F120-10L	XK Cable Assembly, Fanuc 120iC/10L,120iC/12L
KHX-F12D	XK Cable Assembly, Fanuc 120iD
KHX-F12D-12	XK Cable Assembly, Fanuc 120iD/12L
KHX-M140	XK Cable Assembly, Motoman EA / MA1400
KHX-M190	XK Cable Assembly, Motoman EA / MA1900
KHX-M310	XK Cable Assembly, Motoman MA3100
KHX-M144	XK Cable Assembly, Motoman MA1440
KHX-OMV4	XK Cable Assembly, OTC AX MV4AP/MV4LAP

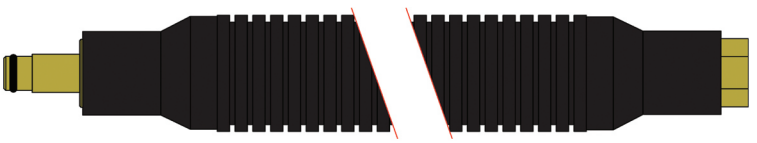

Liner Selection

KOOL-RUN® Front Load™ Liners

164-FL	Front Load™ Liner Collet
164-FL3	Front Load™ Liner Collet for 3/32" Wire Only
164FL-45-6	Front Load™ Liner for .030" - .045" wire, 6'
164FL-45-10	Front Load™ Liner for .030" - .045" wire, 10'
164FL-116-1	Front Load™ Liner for 3/64" - 1/16" wire, 1'
164FL-116-6	Front Load™ Liner for 3/64" - 1/16" wire, 6'
164FL-116-10	Front Load™ Liner for 3/64" - 1/16" wire, 10'
164-116SN-6	Front Load™ Liner for 3/64" - 1/16" wire, 6'
164FL-564-6	Front Load™ Liner for 1/16" - 5/64" wire, 6'
164FL-564-10	Front Load™ Liner for 1/16" - 5/64" wire, 10'
164FL-332-6	Front Load™ Liner for 5/64" - 3/32" wire, 6'
164FL-332-10	Front Load™ Liner for 5/64" - 3/32" wire, 10'

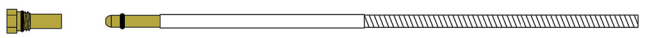

164-FL

KOOL-RUN® Conventional Liners (required for Wire Brake)

164-30-6	Liner for .030" - .035" wire, 6'
164-30-10	Liner for .030" - .035" wire, 10'
164-45-6	Liner for .035" - .045" wire, 6'
164-45-10	Liner for .035" - .045" wire, 10'
164-45A-6	Liner for .035" - .045" wire, 6' (for Lincoln® AutoDrive® S Only)
164-45AN-5	Liner for .035" - .045" wire, 5' (for Lincoln® AutoDrive® S Only)
164-116-6	Liner for 3/64" - 1/16" wire, 6'
164-116-10	Liner for 3/64" - 1/16" wire, 10'
164-564-6	Liner for 1/16" - 5/64" wire, 6'
164-564-10	Liner for 1/16" - 5/64" wire, 10'
164-332-6	Liner for 5/64" - 3/32" wire, 6'
164-332-10	Liner for 5/64" - 3/32" wire, 10'



KOOL-RUN® Liners for Aluminum

164-364TF-6	Teflon Liner for .030" - 3/64" wire, 6'
164-364TF-10	Teflon Liner for .030" - 3/64" wire, 10'
164-116TF-6	Teflon Liner for 3/64"" - 1/16" wire, 6'
164-116TF-10	Teflon Liner for 3/64"" - 1/16" wire, 10'

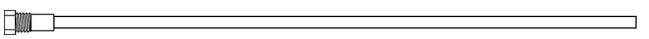

KOOL-RUN® Wire Brake Jump Liner

164-45J	Jump Liner for Wire Brake, .035" - .045"
164-116J	Jump Liner for Wire Brake, .045" - 1/16"



COPYRIGHT © 2025 CM INDUSTRIES, INC. ALL RIGHTS RESERVED

Exploded View & Parts List for Solid Mount

ITEM	PART #	DESCRIPTION
1.	152-xx-xxP	See Page 7 **"Plated Nozzle Selection"**
2.	155-x-xxx	See Page 6 **"Contact Tip Selection"**
3.	154-Rxxx	See Page 6 **"Gas Diffuser Selection"**
4.	KR50-1	Neck Insulator
5.	KR502-22	Neck, 22°
	KR502-45	Neck, 45°
	KR502-180	Neck, 180°
	KR502-22L1	Neck, 22° - Long
	KR502-45L1	Neck, 45° - Long
	KR502-22L2	Neck, 22° - X-Long
	KR502-45L2	Neck, 45° - X-Long
6.	KR502-6	O-Ring
7.	**KHW-200A1**	**Solid Mount Assembly - ABB** IRB 1600ID
	KHW-200D1	**Solid Mount Assembly - OTC** AX MV4AP/ AX MV4LAP
	KHW-200F	**Solid Mount Assembly - Fanuc (iC)** / MA1440
	KHW-200F2	**Solid Mount Assembly - Fanuc (iD)**
	KHW-200M	**Solid Mount Assembly - Motoman** [excludes MA1440]
7a.	KHW-201	Hollow Wrist Torch Body [Included in ITEM 7]
7b.	KHW-211	Hollow Wrist Torch Body Cover [Included in ITEM 7]
7c.	*Not Sellable*	M4x0.7x17 SHCS [Included in ITEM 7]
7d.	KHW-103	Spacer - Fanuc/Motoman [Included in ITEM 7]
	KHW-105	Spacer - ABB/OTC
7e.	KHW-104	Spacer Sleeve [Included in ITEM 7]
7f.	*Not Sellable*	M5x0.8x18 SHCS [Included in ITEM 7]
7g.	KHW-AB160	Insulating Disc - ABB IRB 1600ID
	KHW-FA100	Insulating Disc - Fanuc iC/Motoman MA1440
	KHW-FD100	Insulating Disc - Fanuc iD
	KHW-MM1	Insulating Disc - Motoman
	KHW-OAX1	Insulating Disc - OTC AX MV4AP/MV4LAP
7h.	*Not Sellable*	M4x0.7x12 SHCS [Fanuc/Motoman]
	Not Sellable	M6x1.0x12 SHCS [ABB]
8.	KHW-xxx	See Page 119 **"Power Cables Selection"**
9.	KDP-101	Power Pin, Miller®
	KDP-103	Power Pin, Panasonic®
	KDP-104	Power Pin, Tweco® #4
	KDP-106	Power Pin, OTC®
	KDP-107	Power Pin, Fronius®
	KDP-108	Power Pin, Lincoln® "4R"
	KDP-109	Power Pin, Lincoln® "AutoDrive® S
10.	164FL-xxx	See Page 119 **"Liners Selection"**

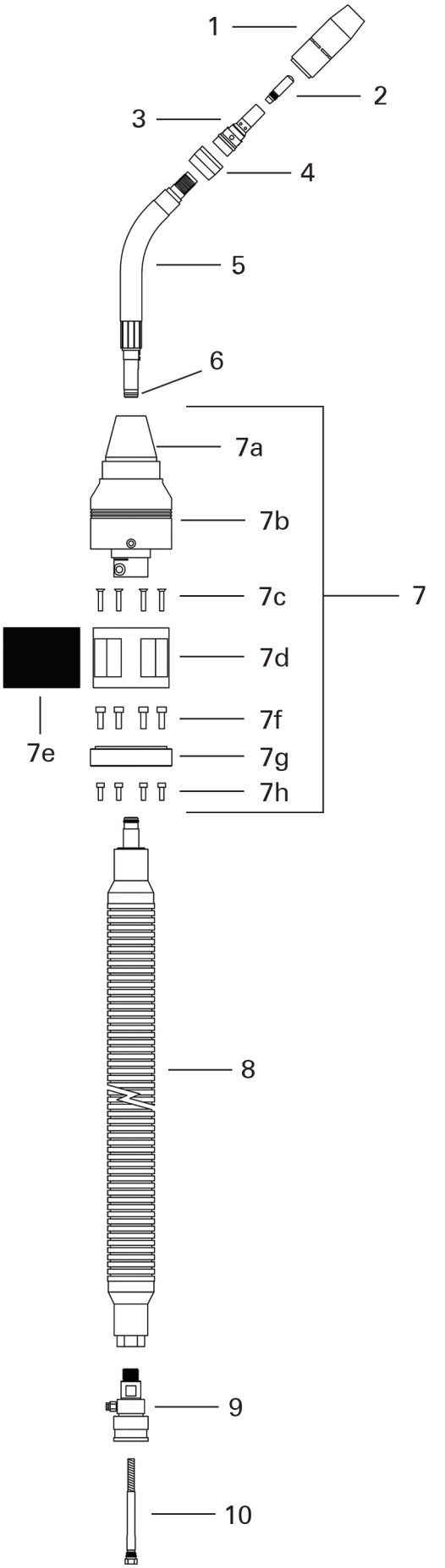

COPYRIGHT © 2025 CM INDUSTRIES, INC. ALL RIGHTS RESERVED

Exploded View & Parts List for Solid Mount w/ X.KOOL

ITEM	PART #	DESCRIPTION
1.	152-xx-xxP	See Page 7 **"Plated Nozzle Selection"**
2.	155-x-xxx	See Page 6 **"Contact Tip Selection"**
3.	154-Rxxx	See Page 6 **"Gas Diffuser Selection"**
4.	KR512-22 KR512-45 KR512-180	X.KOOL Neck, 22° X.KOOL Neck, 45° X.KOOL Neck, 180°
5.	KR512-1	X.KOOL Quick Disconnect
6.	KR512-1-15	X.KOOL Water Line, 15' (each) [Includes ITEM 5]
7.	KR512-14B	X.KOOL Cable Cover Robot Bracket
8.	*Not Sellable*	M5x0.8x35 SHCS [Included in ITEM 7]
9.	KR512-14C	X.KOOL Cable Cover, 14"
10.	KR502-6	O-Ring
11.	**KHX-200A1** **KHX-200D1** **KHX-200F** **KHX-200F2** **KHX-200M**	**Solid Mount Assembly - ABB** IRB 1600ID **Solid Mount Assembly - OTC** AX MV4AP/ AX MV4LAP **Solid Mount Assembly - Fanuc (iC)** **Solid Mount Assembly - Fanuc (iD)** **Solid Mount Assembly - Motoman** [excludes MA1440]
11a.	KHW-201	Hollow Wrist Torch Body [Included in ITEM 11]
11b.	KHX-211	Hollow Wrist Torch Body Cover [Included in ITEM 11]
11c.	*Not Sellable*	M4x0.7x17 SHCS [Included in ITEM 11]
11d.	KHW-103 KHW-105	Spacer - Fanuc/Motoman [Included in ITEM 11] Spacer - ABB
11e.	KHW-104	Spacer Sleeve [Included in ITEM 11]
11f.	*Not Sellable*	M5x0.8x18 SHCS [Included in ITEM 11]
11g.	KHW-xxxxxx	Insulating Disc [Included in ITEM 11]
11h.	*Not Sellable*	M4x0.7x12 SHCS [Fanuc/Motoman]
12.	KHW-xxx	See Page 119 **"Power Cables Selection"**
13.	KDP-101 KDP-103 KDP-104 KDP-106 KDP-107 KDP-108 KDP-109	Power Pin, Miller® Power Pin, Panasonic® Power Pin, Tweco® #4 Power Pin, OTC® Power Pin, Fronius® Power Pin, Lincoln® "4R" Power Pin, Lincoln® "AutoDrive® S
14.	164FL-xxx	See Page 119 **"Liners Selection"**

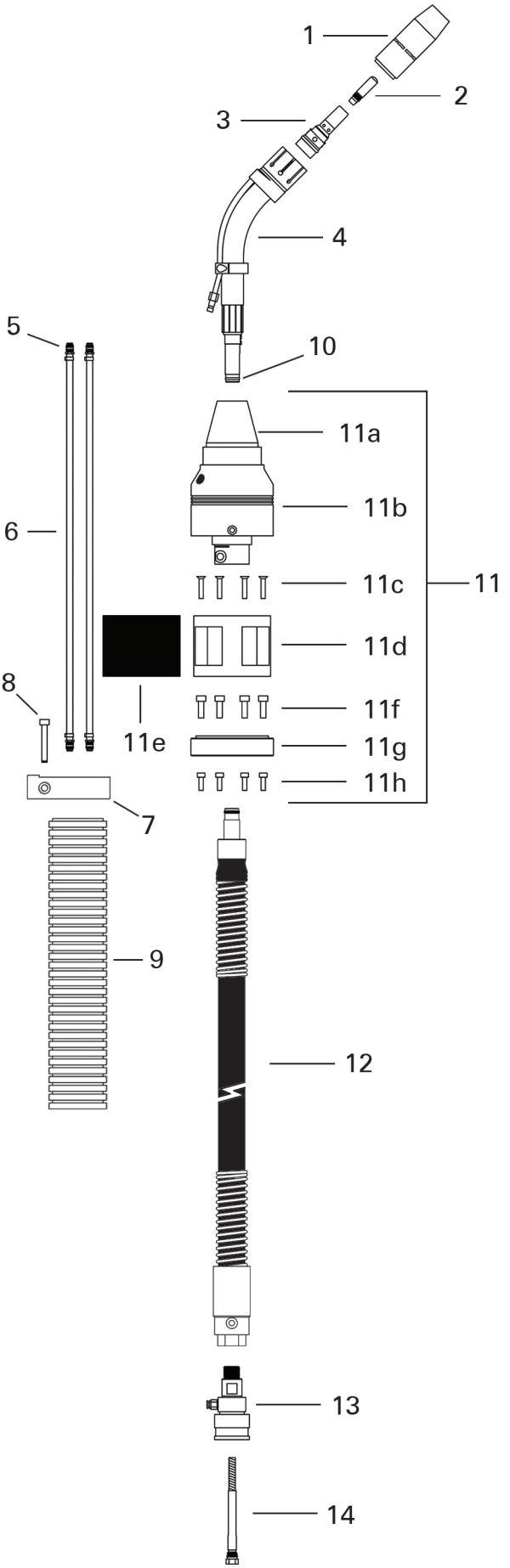

COPYRIGHT © 2025 CM INDUSTRIES, INC. ALL RIGHTS RESERVED

Exploded View & Parts List for Solid Mount w/ Wire Brake

ITEM	PART #	DESCRIPTION
1.	152-xx-xxP	See Page 7 "**Plated Nozzle Selection**"
2.	155-x-xxx	See Page 6 "**Contact Tip Selection**"
3.	154-Rxxx	See Page 6 "**Gas Diffuser Selection**"
4.	KR50-1	Neck Insulator
5.	KR502-22	Neck, 22°
	KR502-45	Neck, 45°
	KR502-180	Neck, 180°
	KR502-22L1	Neck, 22° - Long
	KR502-45L1	Neck, 45° - Long
	KR502-22L2	Neck, 22° - X-Long
	KR502-45L2	Neck, 45° - X-Long
6.	KR502-6	O-Ring
7.	**KWB-200A1**	**Solid Mount Assembly - ABB** IRB 1600ID
	KWB-200D1	**Solid Mount Assembly - OTC** AX MV4AP/ AX MV4LAP
	KWB-200F	**Solid Mount Assembly - Fanuc (iC)**
	KWB-200F2	**Solid Mount Assembly - Fanuc (iD)**
	KWB-200M	**Solid Mount Assembly - Motoman** [excludes MA1440]
7a.	KWB-201	Hollow Wrist Torch Body [Included in ITEM 7]
7b.	KWB-211	Hollow Wrist Torch Body Cover [Included in ITEM 7]
7c.	*Not Sellable*	M4x0.7x17 SHCS [Included in ITEM 7]
7d.	KHW-103	Spacer - Fanuc/Motoman [Included in ITEM 7]
	KHW-105	Spacer - ABB/OTC
7e.	KHW-104	Spacer Sleeve [Included in ITEM 7]
7f.	*Not Sellable*	M5x0.8x18 SHCS [Included in ITEM 7]
7g.	KHW-AB160	Insulating Disc - ABB IRB 1600ID
	KHW-FA100	Insulating Disc - Fanuc iC/Motoman MA1440
	KHW-FD100	Insulating Disc - Fanuc iD
	KHW-MM1	Insulating Disc - Motoman
	KHW-OAX1	Insulating Disc - OTC AX MV4AP/MV4LAP
7h.	*Not Sellable*	M4x0.7x12 SHCS [Fanuc/Motoman]
8.	164-45J	Jump Liner, .045"
	164-116J	Jump Liner, 1/16"
9.	KWB-GT1	Wire Brake Wire Guide Tool
10.	KWB-G045	Wire Brake Wire Guide, .045"
	KWB-G116	Wire Brake Wire Guide, 1/16"
11.	KWB-V1	Wire Brake Valve
12.	KWB-A18-15	Wire Brake Air Line, 15'
13.	KHW-xxx	See Page 119 "**Power Cables Selection**"
14.	KDP-101	Power Pin, Miller®
	KDP-103	Power Pin, Panasonic®
	KDP-104	Power Pin, Tweco® #4
	KDP-106	Power Pin, OTC®
	KDP-107	Power Pin, Fronius®
	KDP-108	Power Pin, Lincoln® "4R"
	KDP-109	Power Pin, Lincoln® "AutoDrive® S
15.	164-xxx	See Page 119 "**Liners Selection**"

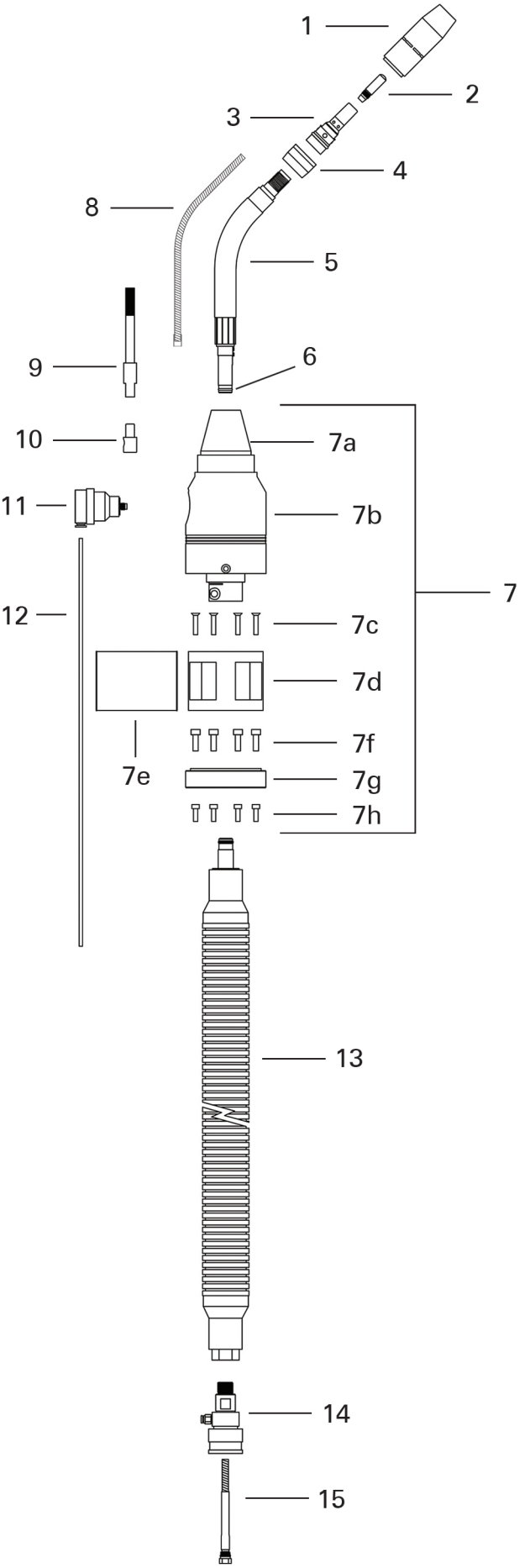

COPYRIGHT © 2025 CM INDUSTRIES, INC. ALL RIGHTS RESERVED

Exploded View & Parts List for Clutch Mount

ITEM	PART #	DESCRIPTION
1.	152-xx-xxP	See Page 7 “**Plated Nozzle Selection**”
2.	155-x-xxx	See Page 6 “**Contact Tip Selection**”
3.	154-Rxxx	See Page 6 “**Gas Diffuser Selection**”
4.	KR50-1	Neck Insulator
5.	KR502-22	Neck, 22°
	KR502-45	Neck, 45°
	KR502-180	Neck, 180°
	KR502-22L1	Neck, 22° - Long
	KR502-45L1	Neck, 45° - Long
	KR502-22L2	Neck, 22° - X-Long
	KR502-45L2	Neck, 45° - X-Long
6.	KR502-6	O-Ring
7.	**KHC-200A1**	**Clutch Mount Assy - ABB** IRB 1600ID
	KHC-200D1	**Clutch Mount Assy - OTC** AX MV4AP/ AX MV4LAP
	KHC-200F	**Clutch Mount Assy - Motoman MA1440/2010**
	KHC-200M	**Clutch Mount Assy - Motoman** [excludes MA1440]
7a.	KHW-201	Hollow Wrist Torch Body [Included in ITEM 7]
7b.	KHW-211	Hollow Wrist Torch Body Cover [Included in ITEM 7]
7c.	*Not Sellable*	M4x0.7x17 SHCS [Included in ITEM 7]
7d.	KHC-101	Safety Clutch Rubber Cover
7e.	KHC-100	Safety Clutch
7f.	*Not Sellable*	M4x0.7x12 SHCS [Included in ITEM 7]
7g.	KHW-AB16C	Clutch Transition Disc - ABB IRB 1600ID
	KHW-FA1C	Clutch Transition Disc - Motoman MA1440
	KHW-MM1C	Clutch Transition Disc - Motoman
	KHW-OAX1C	Clutch Transition Disc - OTC AX MV4AP/MV4LAP
	KHW-OB4C	Clutch Transition Disc - OTC All B4/B4L
7h.	*Not Sellable*	M6x1.0x10 SHCS [ABB]
	Not Sellable	M4x0.7x10 SHCS [Motoman]
	Not Sellable	M5x0.8x10 SHCS [OTC]
8.	KHC-xxx	See Page 119 “**Power Cables Selection**”
9.	KDP-101	Power Pin, Miller®
	KDP-103	Power Pin, Panasonic®
	KDP-104	Power Pin, Tweco® #4
	KDP-106	Power Pin, OTC®
	KDP-107	Power Pin, Fronius®
	KDP-108	Power Pin, Lincoln® “4R”
	KDP-109	Power Pin, Lincoln® “AutoDrive® S
10.	164FL-xxx	See Page 119 “**Liners Selection**”

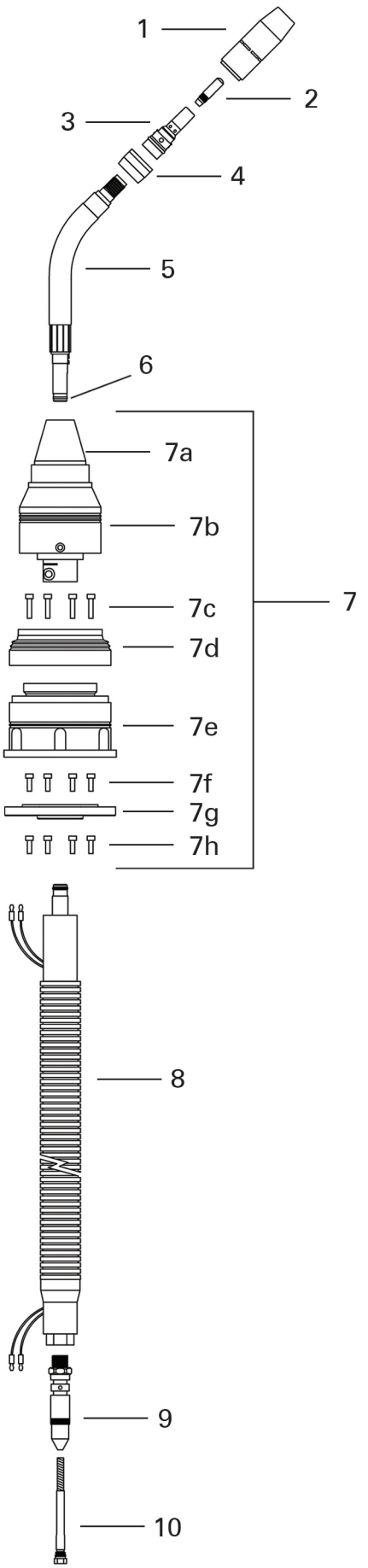

COPYRIGHT © 2025 CM INDUSTRIES, INC. ALL RIGHTS RESERVED

KNC-500 Neck Checking Fixture

IMPORTANT NOTE:
Neck Checking Fixture
not for use of any other necks
except for KR502 & KR502HW

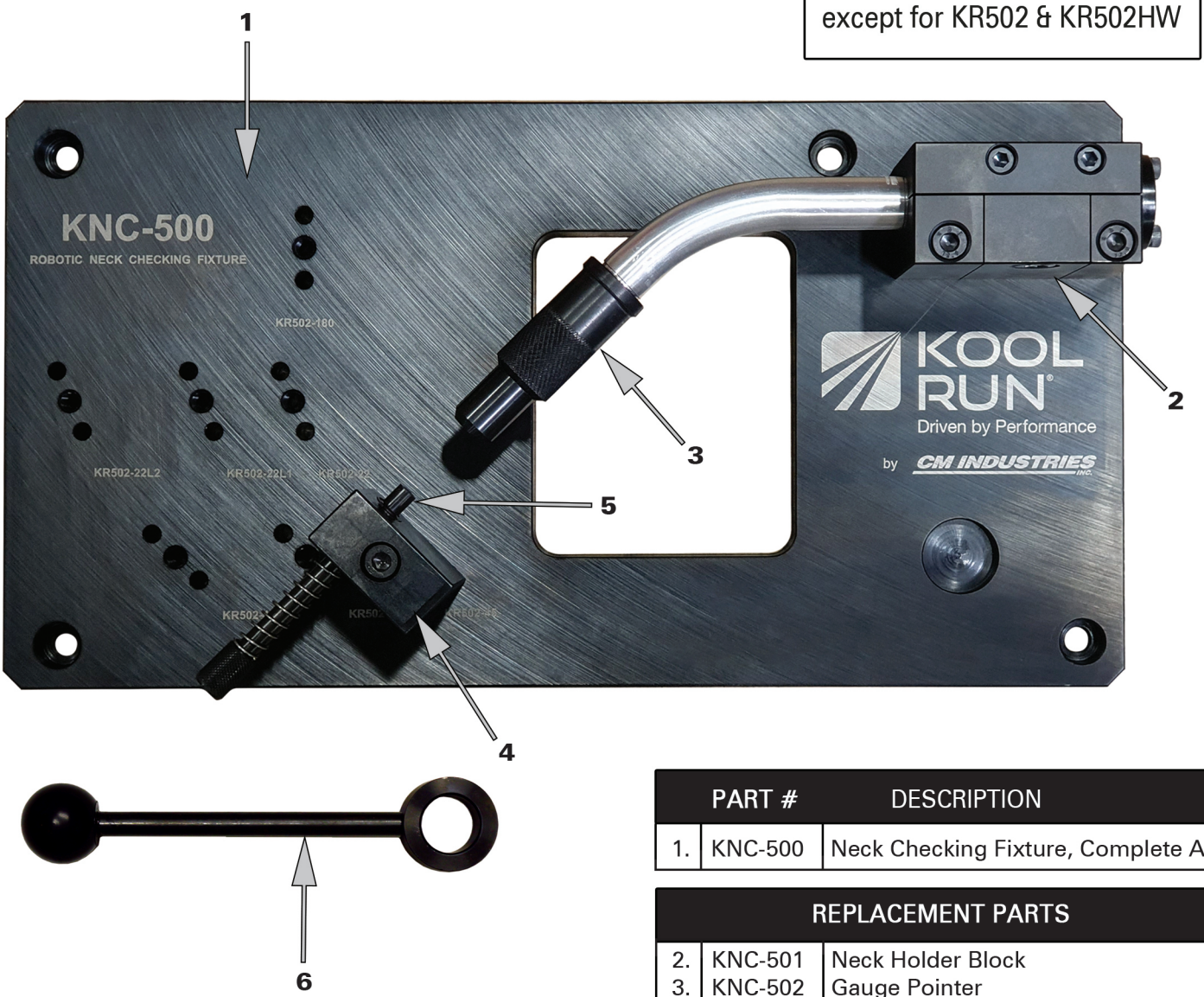

	PART #	DESCRIPTION
1.	KNC-500	Neck Checking Fixture, Complete Assy.

REPLACEMENT PARTS		
2.	KNC-501	Neck Holder Block
3.	KNC-502	Gauge Pointer
4.	KNC-503	Checking Pin Block Assembly
5.	KNC-504	Checking Pin
6.	KNC-505	Bending Handle

- Remove consumables from neck (nozzle, diffuser, insulator, etc.)
- Insert neck into holder block and push to make sure it is all the way in until the neck bottoms out.
- Tighten neck into holder using a 8mm hex wrench.
- Push check pin towards neck and see if the point lines up with the small hole in the end of the gauging point.
- If the neck is not aligned, use the bending handle to make slight adjustments until alignment is correct.
- Remove gauge point and neck in reverse order as described above.

COPYRIGHT © 2025 CM INDUSTRIES, INC. ALL RIGHTS RESERVED

KOOL RUN®
Driven by Performance

WC-95E

WC-95E Pneumatic Wire Cutter

The CMI Wire Cutter removes the ball end of the welding wire for consistent wire stick-out, providing smooth arc starts.

The Wire Cutter can be easily mounted to a remote location or directly to our Nozzle Cleaning Station and can be used with all makes and models of robotic equipment.

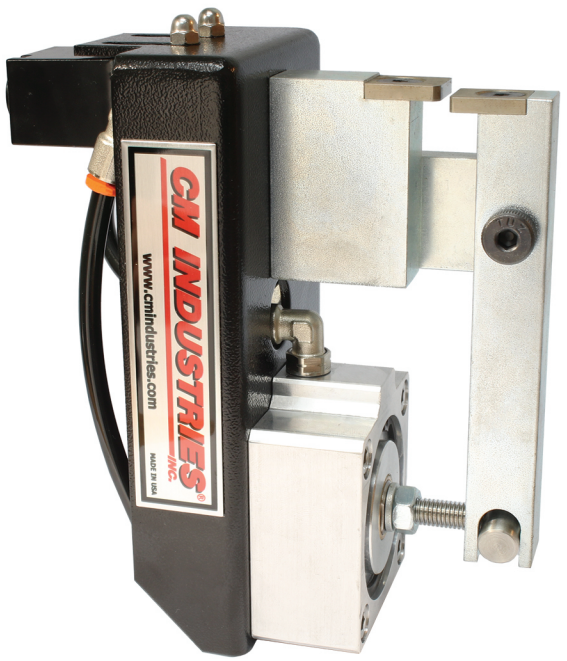

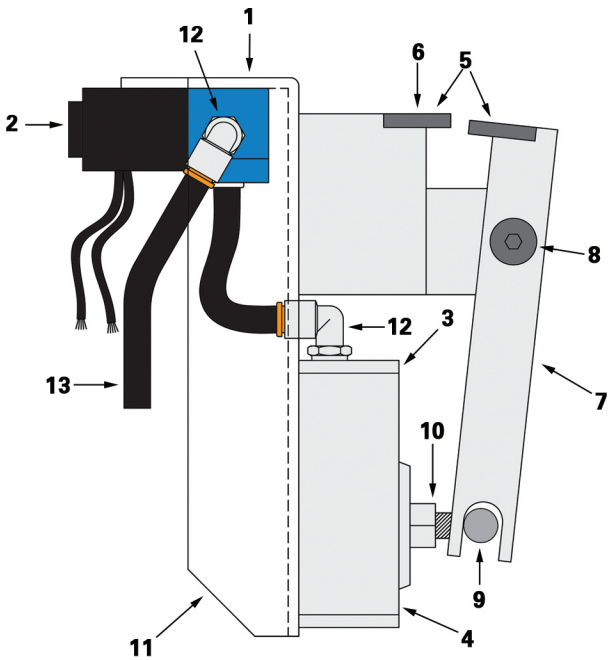

Technical Specifications

AIR REQUIREMENT: 80-120 psi Clean Shop Air

CUTTING RANGE: Up to 1/8" (3.2mm)

MOUNTING: Hole Spacing 2-7/16"

WC-95E Wire Cutter w/ Electronic Valve

Hookup & Operation:

1. Mount the wire cutter directly to the AR2200 series Auto-Reamer™ or any remote location.
2. Provide an air supply, 80-120 psi, to the air inlet on the activator valve (item 2).
3. Program the robot nozzle / welding wire to pass between the cutter blades (item 5).
4. Program the robot to activate the ground "ON" (Line 1) for a cycle time of 0.5 seconds.

#	PART #	DESCRIPTION
1	650-25-096	WC-95E Complete Assembly
2	650-25-420	Electronic Valve
3	650-25-006	Cylinder
4	650-25-010	Screw for Cylinder
5	650-25-028	Cutter Blade
6	650-25-030	Screw, Cutter Blade
7	650-25-034	Arm Assembly
8	650-25-035	Shoulder Bolt
9	650-25-036	Pivot
10	650-25-037	Stud w/ Nut
11	650-25-038	Bracket
12	650-25-738	Male Elbow 1/8" - 1/4" Push
13	650-25-279	Tubing, 1/4" O.D.

COPYRIGHT © 2025 CM INDUSTRIES, INC. ALL RIGHTS RESERVED

AUTO-REAMER

KOOL RUN®
Driven by Performance

AR2200
Nozzle Cleaning Station

Model #
AR2200CW
Pictured

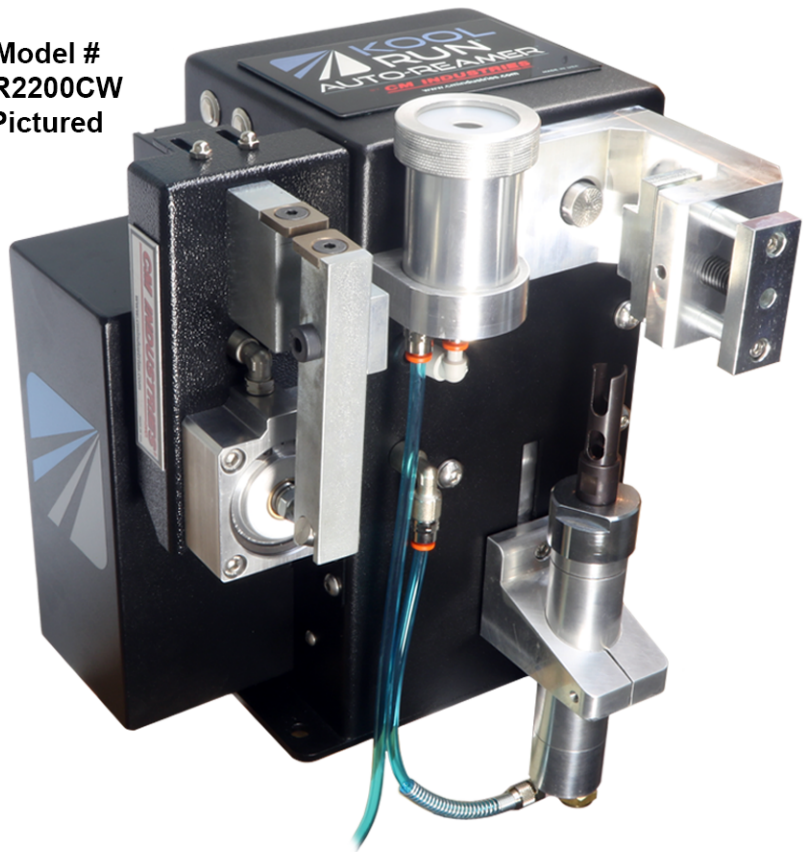

Model #

AR2200A	-	Auto-Reamer, Ream Only, No Sprayer
AR2200C	-	Auto-Reamer w/ Anti-Spatter Sprayer Collection System
AR2200CW	-	Auto-Reamer w/ Anti-Spatter Sprayer Collection System & Wire Cutter
AR2200S	-	Auto-Reamer w/ Anti-Spatter Sprayer
AR2200SW	-	Auto-Reamer w/ Anti-Spatter Sprayer & Wire Cutter

Part #

650 - 25 - xxx

- 800	AR2200A
- 801	AR2200C
- 802	AR2200CW
- 805	AR2200S
- 806	AR2200SW

COPYRIGHT © 2025 CM INDUSTRIES, INC. ALL RIGHTS RESERVED

Reamer Blade Sizes Available

1 Blade Reamers

Part Number	d=O.D. (mm)	d1=I.D. (mm)	Nozzle Size
651-09-07	9	7	3/8" - 10mm
651-10-08	10	8	3/8" - 10mm
651-10.5-08	10.5	8	7/16" - 11mm
651-11-07	11	7	7/16" - 11mm
651-11-08.5	11	8.5	7/16" - 11mm
651-12-07	12	7	1/2" - 13mm
651-12-09	12	9	1/2" - 13mm
651-12-10	12	10	1/2" - 13mm
651-12.5-09	12.5	9	1/2" - 13mm
651-12.5-10	12.5	10	1/2" - 13mm
651-13-09	13	9	14mm
651-14-09	14	9	9/16" - 15mm
651-14-11	14	11	9/16" - 15mm
651-14-12	14	12	9/16" - 15mm
651-14.5-12.5	14.5	12.5	
651-15-09	15	9	5/8" - 16mm
651-15-11	15	11	5/8" - 16mm
651-15-13	15	13	5/8" - 16mm
651-15.5-08	15.5	8	5/8" - 16mm
651-15.5-13	15.5	13	5/8" - 16mm
651-16-11	16	11	16mm
651-17-11	17	11	11/16"- 17mm
651-17-14	17	14	11/16"- 17mm
651-18-11	18	11	3/4" - 18mm
651-18-13	18	13	3/4" - 18mm
651-18-15	18	15	3/4" - 18mm
651-18.5-13	18.5	13	3/4" - 19mm
651-19-15	19	15	3/4" - 19mm

Custom sizes available upon request

2 Blade Reamers

Part Number	d=O.D. (mm)	d1=I.D. (mm)	Nozzle Size
652-09-07	9	7	3/8" - 10mm
652-10-07	10	7	3/8" - 10mm
652-10.5-08	10.5	8	7/16" - 11mm
652-11-07	11	7	7/16" - 11mm
652-11-08.5	11	8.5	7/16" - 11mm
652-12-07	12	7	7/16" - 12mm
652-12-09	12	9	1/2" - 13mm
652-12-10	12	10	1/2" - 13mm
652-12.5-09	12.5	9	1/2" - 13mm
652-12.5-10	12.5	10	1/2" - 13mm
652-13-09	13	9	14mm
652-13-10	13	10	14mm
652-13-10.5	13	10.5	14mm
652-14-09	14	9	9/16" - 15mm
652-14-11	14	11	9/16" - 15mm
652-15-09	15	9	5/8" - 16mm
652-15-10.5-80	15	10.5	5/8" - 16mm
652-15-11	15	11	5/8" - 16mm
652-15-11-80	15	11	5/8" - 16mm
652-15-12	15	12	5/8" - 16mm
652-15-12.5	15	12.5	5/8" - 16mm
652-15-12.5-80	15	12.5	5/8" - 16mm
652-15.5-13	15.5	13	5/8" - 16mm
652-16-11	16	11	16mm
652-16-11-80	16	11	16mm
652-16-12.5	16	12.5	16mm
652-17-11	17	11	11/16"- 17mm
652-17-14	17	14	11/16"- 17mm
652-17-15	17	15	11/16"- 17mm
652-17-15-80	17	15	11/16"- 17mm
652-18-11	18	11	3/4" - 18mm
652-18-13	18	13	3/4" - 18mm
652-18-15	18	15	3/4" - 18mm
652-18.5-13.5	18.5	13.5	3/4" - 18mm
652-19-15	19	15	3/4" - 19mm

*Part #'s ending in "-80" have an OAL of 3.15" (80mm).

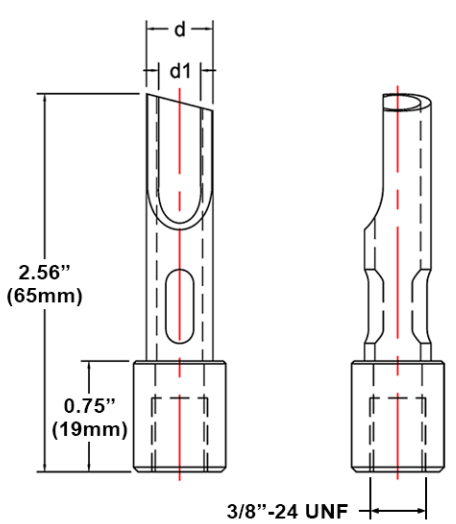

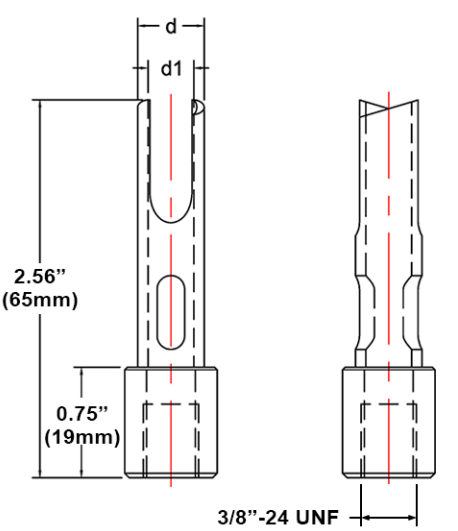

COPYRIGHT © 2025 CM INDUSTRIES, INC. ALL RIGHTS RESERVED

Auto-Reamer Part Breakdown - Outside

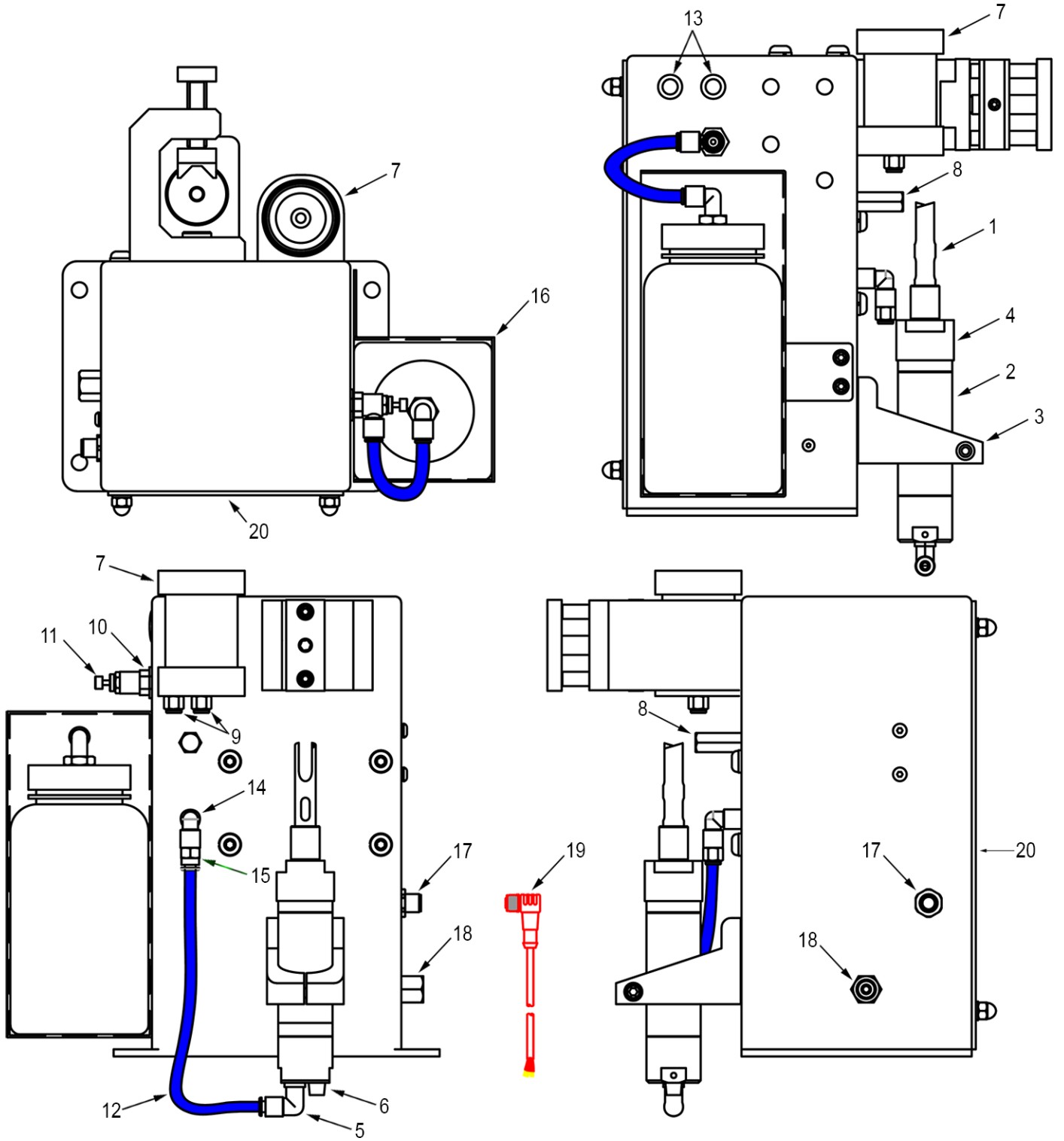

Item #	Part #	Description	Item #	Part #	Description
1		See *Reamer Chart* on page 127	11	650-25-715	Flow Control - Anti-Spatter
2	650-25-105	Pneumatic Motor Assembly	12	650-25-275	1/4” Tubing
3	650-25-701	Motor Clamp Block	13	650-25-360	Momentary Test Buttons
4	650-25-129	Motor Cap	14	650-25-734	Fitting, Female Elbow 1/8” x 1/8”
5	650-25-272	Fitting, Elbow 1/4” NPT x 1/4” Compression	15	650-25-733	Fitting, Male Connector 1/8” x 1/4” Push
6	650-25-725	Motor Muffler	16	650-25-752	Bottle Box
7	650-25-714	External Spray System Assembly (AR2200S)	17	650-25-260	Receptacle 6-Pin
8	650-25-271	Sprayer Body (AR2200)	18	650-25-717	Bulkhead Connector 1/4” NPT x 1/4” Push
9	650-25-718	Fitting, Male Connector for Spray Tip	19	650-25-283	Cordset, 4m std. (650-25-358, Cordset 6m - optional)
10	650-25-736	Adaptor, 1/8”M x 1/8”F	20	650-25-214	Rear Cover Plate

COPYRIGHT © 2025 CM INDUSTRIES, INC. ALL RIGHTS RESERVED

Auto-Reamer Part Breakdown - Inside

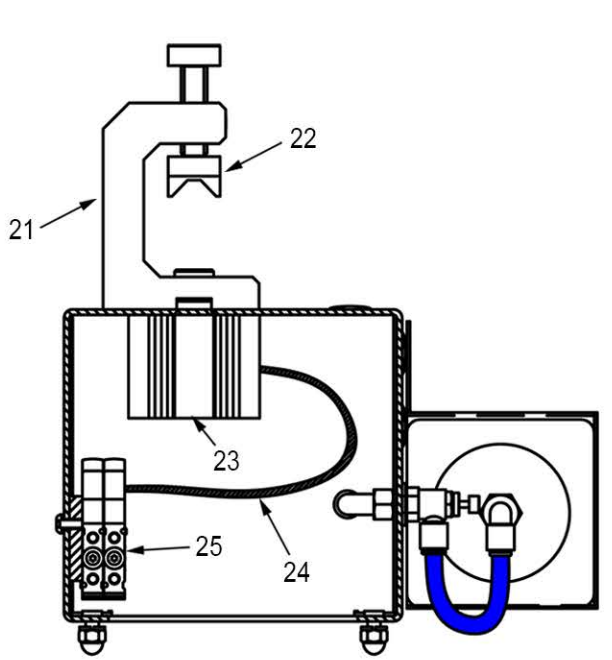

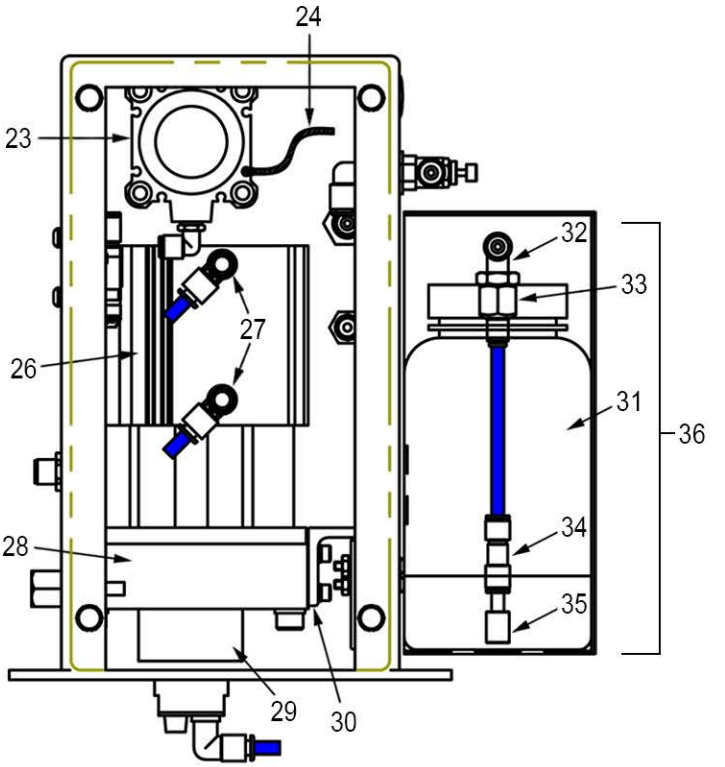

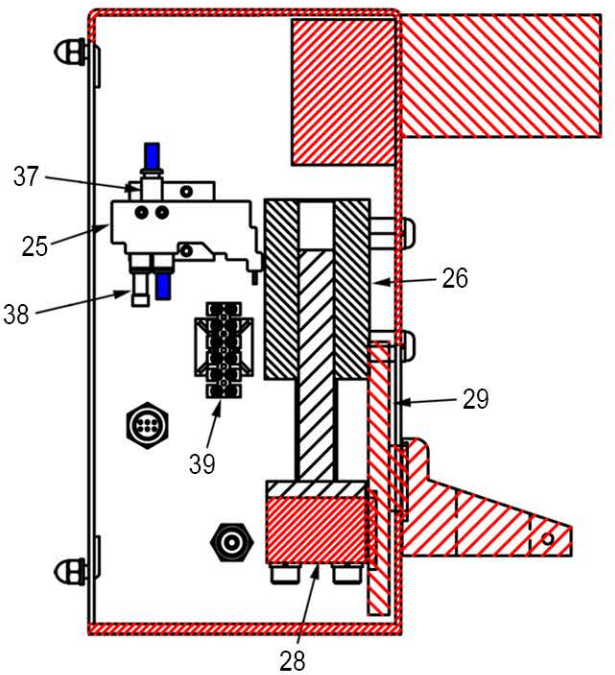

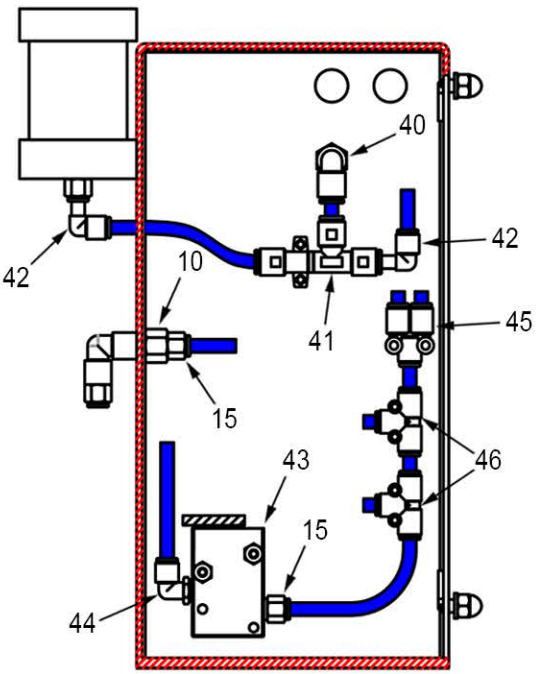

Item #	Part #	Description	Item #	Part #	Description
21	650-25-747	Clamping Block	34	650-25-287	Check Valve
22	650-25-230	V-Block	35	650-25-288	Filter, Anti-Spatter
23	650-25-748	Clamping Block Cylinder	36	650-25-291	Anti-Spatter Bottle Assembly
24	650-25-749	Proximity Switch	37	650-25-278	Fitting, Male Connector 10-32 x 1/4” Push
25	650-25-251	Solenoid Valve (2), Cycle & Spray	38	650-25-737	Plug, 1/4”
26	650-25-236	Motor Lift Cylinder	39	650-25-273	Terminal Block
27	650-25-256	Fitting, Flow Control, Cylinder Speed Adjust.	40	650-25-729	Fitting, Elbow 1/8”F x 1/4” Push
28	650-25-703	Motor Clamp Block Base	41	650-25-716	Vacuum Valve, 1/4” Tube
29	650-25-702	Motor Clamp Block Slide Plate	42	650-25-731	Fitting, Plug-In Elbow, 1/4” Push
30	650-25-239	Valve Actuating Bracket	43	650-25-247	Mechanical Valve
31	650-25-290	Anti-Spatter Bottle	44	650-25-264	Fitting, Elbow 1/8” NPT x 1/4” Push
32	650-25-730	Fitting, Elbow 1/4” x 1/4” Push	45	650-25-735	Fitting, Union “Y”, 1/4” Push
33	650-25-732	Fitting, Female Connector 1/4” x 1/4” Push	46	650-25-268	Fitting, Union “T”, 1/4” Push

COPYRIGHT © 2025 CM INDUSTRIES, INC. ALL RIGHTS RESERVED

G1

KOOL RUN®
Driven by Performance

CM Industries® Kool Run® line of robotic torches also offers an air-cooled MIG torch to replace existing Tregaskiss® G1 "Over-the-Arm" robotic applications. Expect the same exceptional durability and accuracy as with our standard line of Kool Run® robotic torches. The torches' superior electrical and heat transfer capability results in increased service life and consistent performance, substantially lowering annual operating costs and Total Cost of Ownership.



- Direct replacement for original Tregaskiss® G1 Series of MIG torches
- Rugged design for long life
- Quick-change neck and cable assemblies for easy maintenance
- Connect to all popular feeders
- Wide range of high-performance Kool Run® consumables

Torch Amperage Ratings

Kool Run Torch Model	100% Duty Cycle		60% Duty Cycle	
	CO2	Mixed Gas	CO2	Mixed Gas
G1	500 AMP	**350 AMP**	600 AMP	**500 AMP**

COPYRIGHT © 2025 CM INDUSTRIES, INC. ALL RIGHTS RESERVED

Technical Data

-Neck Dimensions-

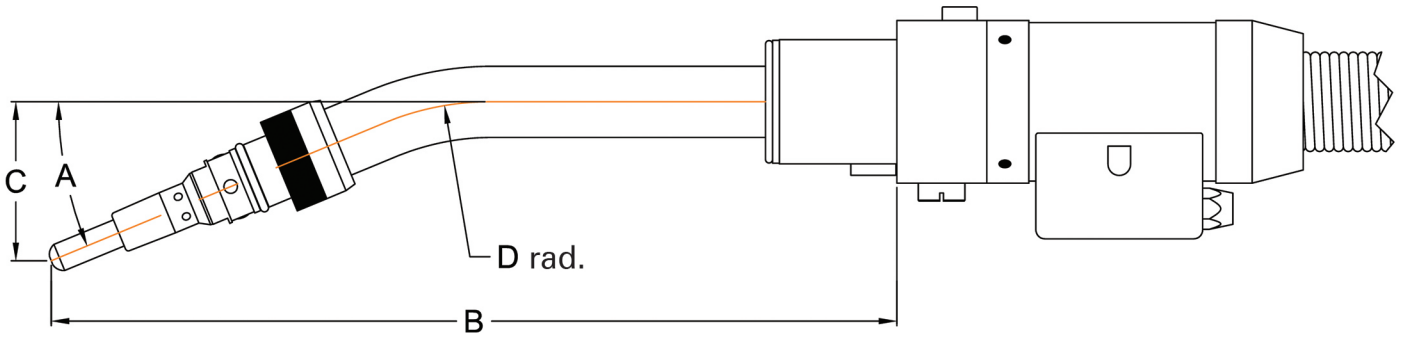

Neck	A	B	C	D
405-22QC	22°	9.355" (237.6mm)	1.623" (41.2mm)	3.00" (76.2mm)
405-45QC	45°	7.607" (193.6mm)	3.530" (89.7mm)	3.00" (76.2mm)
405-180QC	180°	8.816" (223.9mm)	-	-

Ordering Information

Part# Configurator

M5406-45-445-S

Power Pin
(blank) - Tweco #4
M - Miller
LN - Lincoln "LN"
PA - Panasonic
TW - Tweco #5
OX - OXO
D - OTC / Daihen
F - Fronius
E - Euro

Torch Model
Standard Torch Model
500 Amp Robotic A/C

Length
03 - 3 ft
3.5 - 3.5 ft
04 - 4 ft
4.5 - 4.5 ft
up to
15 - 15 ft

Wire Size
30 - .030"
35 - .035"
40 - .040"
45 - .045"
364 - 3/64"
52 - .052"
116 - 1/16"
1.8 - 1.8mm
564 - 5/64"
332 - 3/32"

Neck
(blank) - 180° Straight
422 - 22° Bend
445 - 45° Bend

Wiring
(blank) - Wired for Clutch
S - No Wiring

Standard Torch Components

Standard Models are shipped with the following parts:

MODEL	NECK	NOZZLE	DIFFUSER	CONTACT TIP
500 Amp	405-180QC	401-6-62	154-R506	155-1-XXX

COPYRIGHT © 2025 CM INDUSTRIES, INC. ALL RIGHTS RESERVED

Exploded View & Parts List

ITEM	PART #	DESCRIPTION
1.	152-xx-xxC	See Page 7 **"Plated Nozzle Selection"**
2.	155-x-xxx	See Page 6 **"Contact Tip Selection"**
3.	154-R50x	See Page 6 **"Gas Diffuser Selection"**
4.	KR50-2	Neck Insulator
5.	405-22QC 405-45QC 405-180QC	Neck, 22° Neck, 45° Neck, 180°
6.	405-1QC	Neck O-Ring
7.		**Unicable Assembly - Complete**
	513-203	500A Unicable for Clutch Mount, 3'
	513-203.5	500A Unicable for Clutch Mount, 3.5'
	513-204	500A Unicable for Clutch Mount, 4'
	513-204.5	500A Unicable for Clutch Mount, 4.5'
	513-205	500A Unicable for Clutch Mount, 5'
	513-2xx	500A Unicable for Clutch Mount, up to 15'
8.	513-203S	500A Unicable for Solid Mount, 3'
	513-203.5S	500A Unicable for Solid Mount, 3.5'
	513-204S	500A Unicable for Solid Mount, 4'
	513-204.5S	500A Unicable for Solid Mount, 4.5'
	513-205S	500A Unicable for Solid Mount, 5'
	513-2xxS	500A Unicable for Solid Mount, up to 15'
9.	510-200-2	Housing
10.	R214	Power Pin, Tweco® #4
	R214-1	Power Pin, Miller®
	R214-2	Power Pin, Lincoln® "LN"
	R214-7	Power Pin, Lincoln® "LN" (short)
	R214-30	Power Pin, Panasonic®
	R214-39	Power Pin, OTC Daihen®
	R214-40	Power Pin, Lincoln® "4R"
	R214-41	Power Pin, Fronius®
11.	415-30-6	Liner Assembly, .030", 6'
	415-30-10	Liner Assembly, .030", 10'
	415-30-15	Liner Assembly, .030", 15'
	415-35-6	Liner Assembly .035"-.045", 6'
	415-35-10	Liner Assembly .035"-.045", 10'
	415-35-15	Liner Assembly .035"-.045", 15'
	415-116-6	Liner Assembly .045"-1/16", 6'
	415-116-10	Liner Assembly .045"-1/16", 10'
	415-116-15	Liner Assembly .045"-1/16", 15'
	415-332-6	Liner Assembly, 5/64-3/32", 6'
	415-332-10	Liner Assembly, 5/64-3/32", 10'
	415-332-15	Liner Assembly, 5/64-3/32", 15'
	415-35-2	Liner Assembly .035"-3/64", 15' Aluminum
	415-116-2	Liner Assembly 3/64"-1/16", 15' Aluminum

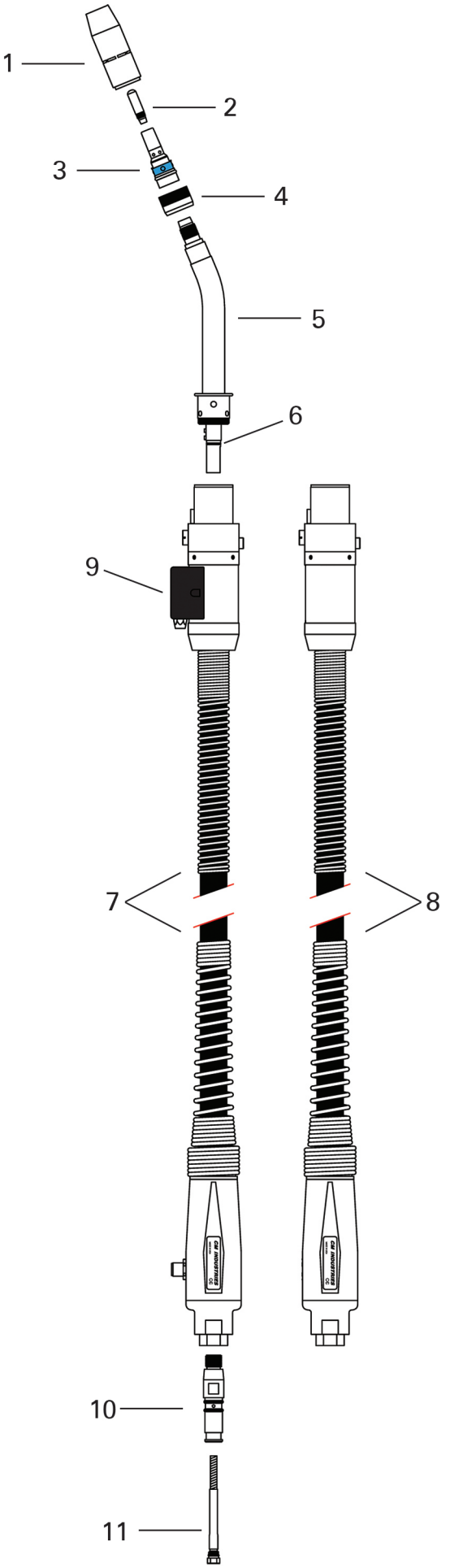

COPYRIGHT © 2025 CM INDUSTRIES, INC. ALL RIGHTS RESERVED

LSR Cables

KOOL RUN
Driven by Performance



The KR5-EZ1 is designed to directly replace Tregaskiss® LSR Unicables

EZ TURN TECHNOLOGY
- Same tech used in KOOL RUN KR502HW
- Rated for 350 Amp @ 100%
- Fully protected and insulated
- Smooth Rotation

STRESS-FREE
- Smooth rotation
- Increase overall life of cable over conventional robotic power cables

LIMITLESS ROTATION
- Start and End in any position
- No restriction on torch body and neck rotation
- Spin 360° endlessly and never worry about cable torsion

INCREASED PRODUCTIVITY
- Longer life over OEM
- Less downtime = Decreased operating costs

Robot Brand	Robot Model	Tregaskiss® Part #	CM Industries Part #
ABB®	IRB1600ID, IRB1520ID	58SA024	KR58SA024
	IRB2600ID - 15/1.85	58SA028	KR58SA028
	IRB2600ID - 8/2.00	58SA029	KR58SA029
	IRB1660ID	58SA030	KR58SA030
Fanuc®	100iC, 100iC/12	58SF005	KR58SF005
	100iC/6L, 100iC/7L	58SF007	KR58SF007
	120iC	58SF006	KR58SF006
	120iC/10L, 120iC/12L	58SF008	KR58SF008
	100iC/8L	58SF010	KR58SF010
	100iD	58SF011	KR58SF011
	100iD/8L	58SF012	KR58SF012
	100iD/10L	58SF014	KR58SF014
	120iD	58SF015	KR58SF015
	120iD/12L	58SF016	KR58SF016
KUKA®	KR 5 HW	58SK023	KR58SK023
	KR 16 L8 HW	58SK027	KR58SK027
	KR 16 HW	58SK030	KR58SK030
	KR 6/8 R1820 HW	58SK031	KR58SK031
	KR 8 R1420 / R1620 HW	58SK032	KR58SK032
	KR 8 R2100 HW	58SK033	KR58SK033
Motoman®	MA1440, AR1440, MH12	58CM035*	KR58CM035
	MA2010, AR2010	58CM038*	KR58CM038
OTC®	AX-MV4 AP	58CD003*	KR58SD003
	AX-MV4I AP	58CD022*	KR58SD022
	FD-B4	58CD036*	KR58SD036
	FD-B4L	58CD037*	KR58SD037
	FD-B6	58CD038*	KR58SD038
	FD-B6L	58CD050*	KR58SD050

* All Clutch Mount applications not available at this time

COPYRIGHT © 2025 CM INDUSTRIES, INC. ALL RIGHTS RESERVED



COPYRIGHT © 2025 CM INDUSTRIES, INC. ALL RIGHTS RESERVED

TIG Torches

TIG TORCHES AND REPLACEMENT PARTS

CM Industries offers a large variety of TIG welding torch options:



Air Cooled Torch Models:
#9, #17, #24, #26

Water-Cooled Torch Models:
#12, #18, #20, #22, #25, #27

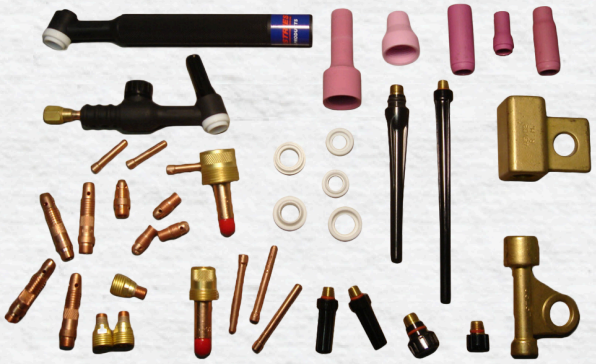

We also provide collets, nozzles, gas lenses, back caps, welding kits, and power cables

WATER COOLERS

Our US-made high-efficiency, high-circulation stainless steel MIG and TIG welding coolers feature 2- or 3- gallon reservoir capacities



115V or 230V AC motor voltages

100 psi pump capacity

COPYRIGHT © 2025 CM INDUSTRIES, INC. ALL RIGHTS RESERVED

9 Series TIG Torch

125 AMP Air-Cooled

#	Part #	Description
1	9	Torch Body
2	9V	Torch Body, w/ Valve
3	9F	Torch Body, Flex Head
4	9FV	Torch Body, Flex w/ Valve
5	9P	Torch Body, Pencil
6	598882	Gasket/Insulator
7	41V24	Back Cap, Long
8	41V35	Back Cap, Medium
9	41V33	Back Cap, Short
10	98W18	O-Ring, Back Cap
11	VS-2	Valve Stem
12	CC-3-10	Cable Cover, 3”x10’
	CC-3-22	Cable Cover, 3”x22’
13	57Y01-2	Power Cable, 12.5’ 2pc
	57Y03-2	Power Cable, 25’ 2 pc
14	57Y01R	Power Cable, 12.5’ Rubber
	57Y03R	Power Cable, 25’ Rubber
15	See Chart	Collet
16	See Chart	Collet Body
17	See Chart	Nozzle
18	See Chart	Nozzle
19	See Chart	Nozzle
20	H-100R	Handle, Ribbed
21	H-100	Handle, Textured
22	BS-1	Boot Switch, Rubber
23	DI-917F	Dinse 50mm, w /In-Line Gas Hole
24	DP-25M	Dinse 25mm
25	DP-50M	Dinse 50mm
26	DA-917F	Dinse 50mm, w/ 13” Gas Hose
27	DA-917FS	Dinse 25mm, w/ 18” Aux. Hose
28	105Z57	Power Cable Adapter



9 Series Torch Packages, 125 Amp

Part #	Description
9	Torch Body, 125 Amp
9-12-2	Torch Pkg. 125 Amp 12.5', 2 Pc.
9-12-R	Torch Pkg. 125 Amp12.5', Rubber
9-25-2	Torch Pkg. 125 Amp 25', 2 Pc.
9-25-R	Torch Pkg. 125 Amp 25', Rubber
9F	Torch Body, 125 Amp Flex-Head
9F-12-2	Torch Pkg. 125 Amp 12.5', Flex-Head, 2 Pc.
9F-12-R	Torch Pkg. 125 Amp 12.5', Flex-Head, Rubber
9F-25-2	Torch Pkg. 125 Amp 25', Flex-Head, 2 Pc.
9F-25-R	Torch Pkg. 125 Amp 25', Flex-Head, Rubber
9FV	Torch Body, 125 Amp Flex-Head w/ Valve
9FV-12-2	Torch Pkg. 125 Amp 12.5', Flex-Head w/ Valve, 2 Pc.
9FV-12-R	Torch Pkg. 125 Amp 12.5', Flex-Head w/ Valve, Rubber
9FV-25-2	Torch Pkg. 125 Amp 25', Flex-Head w/ Valve, 2 Pc.
9FV-25-R	Torch Pkg. 125 Amp 25', Flex-Head w/ Valve, Rubber

Part #	Description
9P	Torch Body, 125 Amp Pencil 180°
9P-12-2	Torch Pkg. 125 Amp 12.5', 180°, 2 Pc.
9P-12-R	Torch Pkg. 125 Amp 12.5', 180°, Rubber
9P-25-2	Torch Pkg. 125 Amp 25', 180°, 2 Pc.
9P-25-R	Torch Pkg. 125 Amp 25', 180°, Rubber
9V	Torch Body, 125 Amp w/ Valve
9V-12-2	Torch Pkg. 125 Amp 12.5', w/ Valve, 2 Pc.
9V-12-R	Torch Pkg. 125 Amp 12.5', w/ Valve, Rubber
9V-25-2	Torch Pkg. 125 Amp 25', w/ Valve, 2 Pc.
9V-25-R	Torch Pkg. 125 Amp 25', w/ Valve, Rubber

COPYRIGHT © 2025 CM INDUSTRIES, INC. ALL RIGHTS RESERVED

CM INDUSTRIES® INC.

Standard Set-Up

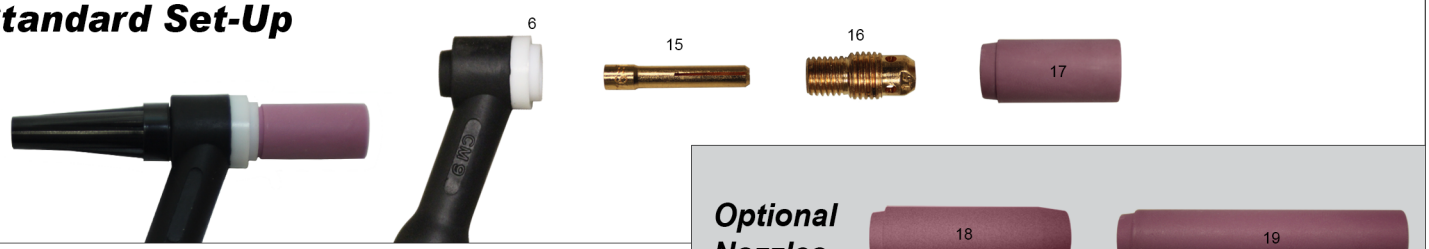

Optional Nozzles

Small Gas Lens Set-Up



Large Stubby Gas Lens Set-Up

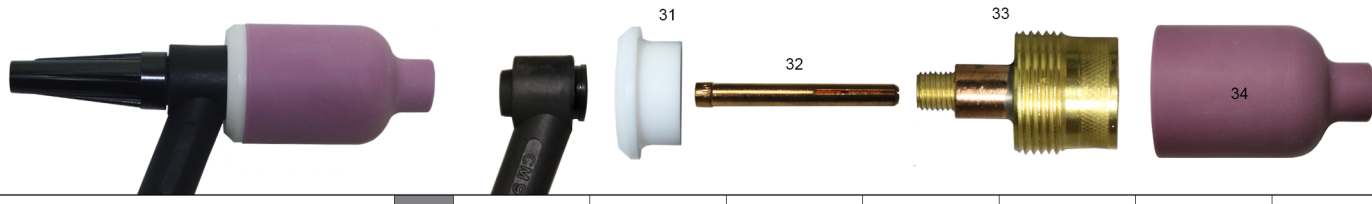

Electrode Diameter			.020" (0.5mm)	.040" (1.0mm)	1/16" (1.6mm)	3/32" (2.4mm)	1/8" (3.2mm)	5/32" (4.0mm)
Nozzle Size	#	#3 (3/16")	#4 (1/4")	#5 (5/16")	#6 (3/8")	#7 (7/16")	#8 (1/2")	#10 (5/8")
Standard Set-Up								
Gasket Insulator	6		598882	598882	598882	598882	598882	
Collet	14		13N20	13N21	13N22	13N23	13N24	
Collet Body	15		13N25	13N26	13N27	13N28	13N29	
Alumina Nozzle Standard	16		13N08	13N09	13N10	13N11	13N12	13N13
Alumina Nozzle Long	17	A796F70	A796F71	A796F72	A796F73			
Alumina Nozzle Extra Long	18	A796F74	A796F75	A796F76	A796F77			
Small Gas Lens Set-Up								
Gasket Insulator	6		598882	598882	598882	598882	598882	
Collet	15		13N20	13N21	13N22	13N23	13N24	
Gas Lens Collet Body	29		45V41	45V42	45V43	45V44	45V45	
Alumina Nozzle Gas Lens	30		53N58	53N59	53N60	53N61	53N61S	
Large Stubby Gas Lens Set-Up								
Gasket Insulator	31		54N63-20	54N63-20	54N63-20	54N63-20	54N63-20	
Gas Lens Collet	32		13N20L	13N21L	13N22L	13N23L	13N24L	
Gas Lens Collet Body	33		45V0204S	45V0204S	45V116S	45V64S	995795S	
Alumina Nozzle Gas Lens	34				57N75		57N74	53N88
							#12 (3/4")	53N87
							#15 (15/16")	53N89

COPYRIGHT © 2025 CM INDUSTRIES, INC. ALL RIGHTS RESERVED

17 Series TIG Torch

150 AMP Air-Cooled

#	Part #	Description
1	17	Torch Body
2	17V	Torch Body, w/ Valve
3	17F	Torch Body, Flex Head
4	17FV	Torch Body, Flex w/ Valve
5	18CG	Gasket/Insulator
6	18-7	Back Insulator
7	57Y02	Back Cap, Long
8	300M	Back Cap, Medium
9	57Y04	Back Cap, Short
10	98W18	O-Ring, Back Cap
11	VS-2	Valve Stem
12	CC-3-10	Cable Cover, 3”x10’
	CC-3-22	Cable Cover, 3”x22’
13	57Y01-2	Power Cable, 12.5’ 2 pc
	57Y03-2	Power Cable, 25’ 2 pc
14	57Y01R	Power Cable, 12.5’ Rubber
	57Y03R	Power Cable, 25’ Rubber
15	See Chart	Collet
16	See Chart	Collet Body
17	See Chart	Nozzle
18	See Chart	Nozzle
19	H-100R	Handle, Ribbed
20	H-100	Handle, Textured
21	BS-1	Boot Switch, Rubber
22	DI-917F	Dinse 50mm, w /In-Line Gas Hole
23	DP-25M	Dinse 25mm
24	DP-50M	Dinse 50mm
25	DA-917F	Dinse 50mm, w/ 18” Gas Hose
26	DA-917FS	Dinse 25mm, w/ 18” Gas Hose
27	105Z57	Power Cable Adapter



17 Series Torch Packages, 150 Amp

Part #	Description
17	Torch Body, 150 Amp
17-12-2	Torch Pkg. 150 Amp 12.5', 2 Pc.
17-12-R	Torch Pkg. 150 Amp 12.5', Rubber
17-25-2	Torch Pkg. 150 Amp 25', 2 Pc.
17-25-R	Torch Pkg. 150 Amp 25', Rubber
17F	Torch Body, 150 Amp Flex-Head
17F-12-2	Torch Pkg. 150 Amp 12.5', Flex-Head, 2 Pc.
17F-12-R	Torch Pkg. 150 Amp 12.5', Flex-Head, Rubber
17F-25-2	Torch Pkg. 150 Amp 25', Flex-Head, 2 Pc.
17F-25-R	Torch Pkg. 150 Amp 25', Flex-Head, Rubber

Part #	Description
17FV	Torch Body, 150 Amp Flex-Head w/ Valve
17FV-12-2	Torch Pkg. 150 Amp 12.5', Flex-Head w/ Valve, 2 Pc.
17FV-12-R	Torch Pkg. 150 Amp 12.5', Flex-Head w/ Valve, Rubber
17FV-25-2	Torch Pkg. 150 Amp 25', Flex-Head w/ Valve, 2 Pc.
17FV-25-R	Torch Pkg. 150 Amp 25', Flex-Head w/ Valve, Rubber
17V	Torch Body, 150 Amp w/ Valve
17V-12-2	Torch Pkg. 150 Amp 12.5', w/ Valve, 2 Pc.
17V-12-R	Torch Pkg. 150 Amp 12.5', w/ Valve, Rubber
17V-25-2	Torch Pkg. 150 Amp 25', w/ Valve, 2 Pc.
17V-25-R	Torch Pkg. 150 Amp 25', w/ Valve, Rubber

COPYRIGHT © 2025 CM INDUSTRIES, INC. ALL RIGHTS RESERVED

CM INDUSTRIES® INC.

Standard Set-Up

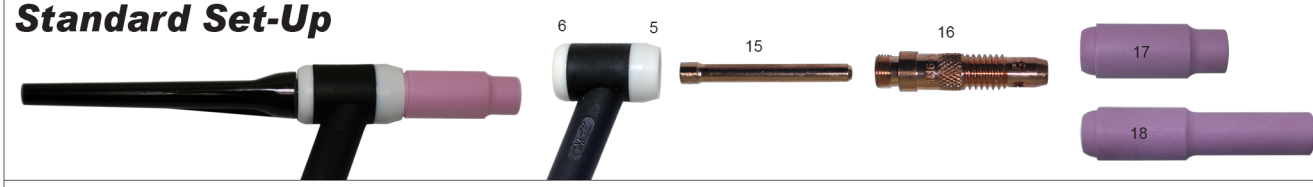

Medium Gas Lens Set-Up

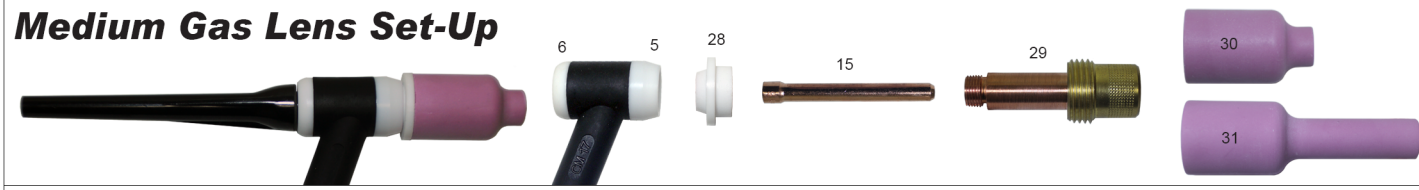

Large Gas Lens Set-Up

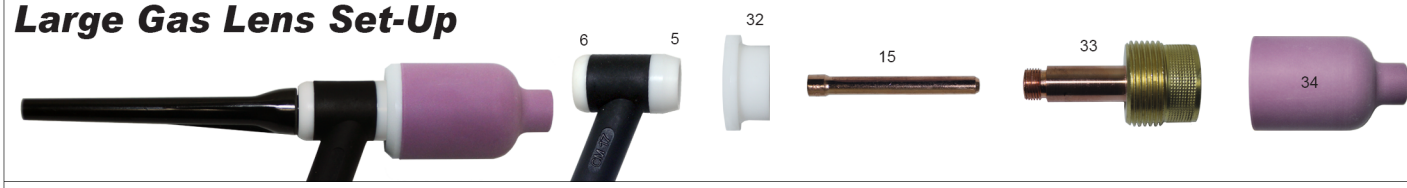

Stubby Collet Body Set-Up

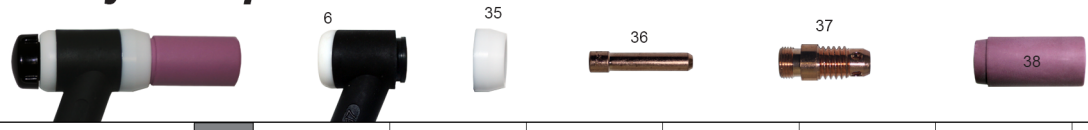

Electrode Diameter		.020" (0.5mm)	.040" (1.0mm)	1/16" (1.6mm)	3/32" (2.4mm)	1/8" (3.2mm)	5/32" (4.0mm)	
Nozzle Size	#	#4 (1/4")	#5 (5/16")	#6 (3/8")	#7 (7/16")	#8 (1/2")	#10 (5/8")	#12 (3/4")
Standard Set-Up								
Gasket Insulator	5	18CG	18CG	18CG	18CG	18CG	18CG	
Collet	15	10N21	10N22	10N23	10N24	10N25	54N20	
Collet Body	16	10N29	10N30	10N31	10N32	10N28	406488	
Alumina Nozzle	17	10N50	10N49	10N48	10N47	10N46	10N45	10N44
Alumina Nozzle Long	18		10N49L	10N48L	10N47L			
Medium Gas Lens Set-Up								
Gasket Insulator	28	54N01	54N01	54N01	54N01	54N01	54N01	
Gas Lens	29	45V29	45V24	45V25	45V26	45V27	45V28	
Alumina Nozzle, Gas Lens	30	54N18	54N17	54N16	54N15	54N14	54N19	
Alumina Nozzle Long, Gas Lens	31		54N17L	54N16L	54N15L	54N14L		
Large Stubby Gas Lens Set-Up								
Gasket Insulator	32	54N63	54N63	54N63	54N63	54N63	54N63	
Lg. Gas Lens	33	45V0204	45V0204	45V116	45V64	995795	45V63	53N87 (#12)
Alumina Nozzle, Lg. Gas Lens	34			57N75		57N74	53N88	53N89 (#15)
Alumina Nozzle Long, Lg. Gas Lens				57N75L		57N74L	53N88L	53N87L
Alumina Nozzle Extra Long, Lg. Gas Lens				57N75XL		57N74XL	53N88XL	53N87XL
Stubby Collet Body Set-Up								
Gasket Insulator	35	18CG20	18CG20	18CG20	18CG20	18CG20		
Stubby Collet	36	10N21S	10N22S	10N23S	10N24S	10N25S		
Stubby Collet Body	37	17CB20	17CB20	17CB20	17CB20	17CB20		
Alumina Nozzle	38	13N08	13N09	13N10	13N11	13N12	13N13	

COPYRIGHT © 2025 CM INDUSTRIES, INC. ALL RIGHTS RESERVED

18 Series TIG Torch

350 AMP Water-Cooled

#	Part #	Description
1	18	Torch Body
2	18F	Torch Body, Flex Head
3	18V	Torch Body, w/ Valve
4	18FV	Torch Body, Flex w/ Valve
5	18P	Torch Body, Pencil
6	18CG	Gasket/Insulator
7	18-7	Back Insulator
8	57Y04	Back Cap, Short
9	300M	Back Cap, Medium
10	57Y02	Back Cap, Long
11	98W18	O-Ring, Back Cap
12	VS-2	Valve Stem
13	53N04	Hose Clamp
14	40V64R	Power Cable, 12.5’ Rubber
	41V29R	Power Cable, 25’ Rubber
15	40V74R	Water Hose, 12.5’ Rubber
	41V32R	Water Hose, 25’ Rubber
16	40V75R	Gas Hose, 12.5’ Rubber
	41V30R	Gas Hose, 25’ Rubber
17	40V64	Power Cable, 12.5’ Vinyl
	41V29	Power Cable, 25’ Vinyl
18	40V74	Water Hose, 12.5’ Vinyl
	41V32	Water Hose, 25’ Vinyl
19	40V75	Gas Hose, 12.5’ Vinyl
	41V30	Gas Hose, 25’ Vinyl
20	See Chart	Collet
21	See Chart	Collet Body
22	See Chart	Nozzle
23	See Chart	Nozzle
24	CC-3-10	Cable Cover, 3”x10’
	CC-3-22	Cable Cover, 3”x22’
	CC-4-10	Cable Cover, 4”x10’
	CC-4-22	Cable Cover, 4”x22’
25	H-200	Handle, Textured
26	H-200R	Handle, Ribbed
27	18PB	Barrel (18P)
28	DA-1820L	Dinse 50mm, w/ 18” Water Hose
29	45V11	Power Cable Adapter



18 Series Torch Packages, 350 Amp

Part #	Description
18	Torch Body, 350 Amp
18-12	Torch Pkg. 350 Amp 12.5'
18-12-R	Torch Pkg. 350 Amp 12.5', Rubber
18-25	Torch Pkg. 350 Amp 25'
18-25-R	Torch Pkg. 350 Amp 25', Rubber
18F	Torch Body, 350 Amp Flex-Head
18F-12	Torch Pkg. 350 Amp 12.5', Flex-Head
18F-12-R	Torch Pkg. 350 Amp 12.5', Flex-Head, Rubber
18F-25	Torch Pkg. 350 Amp 25', Flex-Head
18F-25-R	Torch Pkg. 350 Amp 25', Flex-Head, Rubber
18FV	Torch Body, 350 Amp Flex-Head w/ Valve
18FV-12	Torch Pkg. 350 Amp 12.5', Flex-Head w/ Valve
18FV-12-R	Torch Pkg. 350 Amp 12.5', Flex-Head w/ Valve, Rubber
18FV-25	Torch Pkg. 350 Amp 25', Flex-Head w/ Valve
18FV-25-R	Torch Pkg. 350 Amp 25', Flex-Head w/ Valve, Rubber

Part #	Description
18P	Torch Body, 350 Amp Pencil 180°
18P-12	Torch Pkg. 350 Amp 12.5', 180°
18P-12-R	Torch Pkg. 350 Amp 12.5', 180°, Rubber
18P-25	Torch Pkg. 350 Amp 25', 180°
18P-25-R	Torch Pkg. 350 Amp 25', 180°, Rubber
18V	Torch Body, 350 Amp w/ Valve
18V-12	Torch Pkg. 350 Amp 12.5', w/ Valve
18V-12-R	Torch Pkg. 350 Amp 12.5', w/ Valve, Rubber
18V-25	Torch Pkg. 350 Amp 25', w/ Valve
18V-25-R	Torch Pkg. 350 Amp 25', w/ Valve, Rubber

COPYRIGHT © 2025 CM INDUSTRIES, INC. ALL RIGHTS RESERVED

CM INDUSTRIES INC.

Standard Set-Up

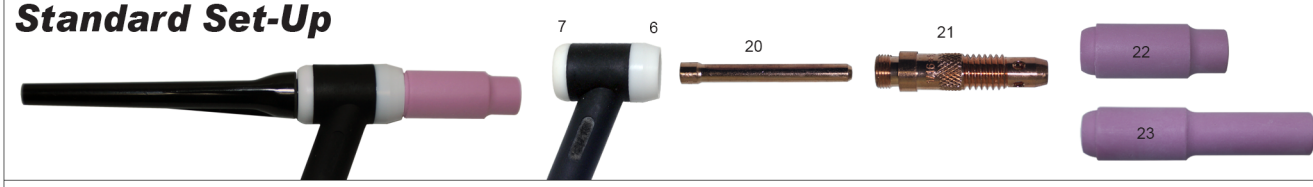

Medium Gas Lens Set-Up

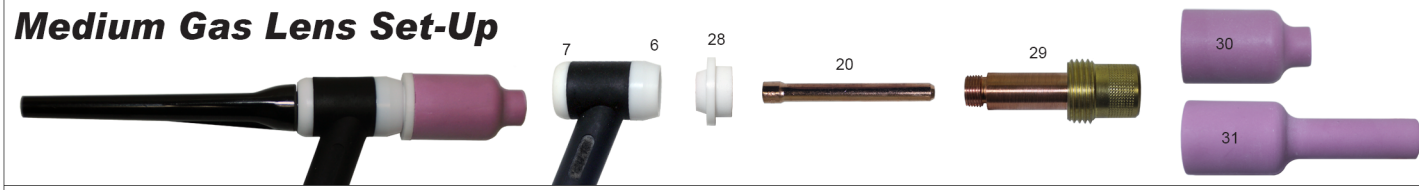

Large Gas Lens Set-Up

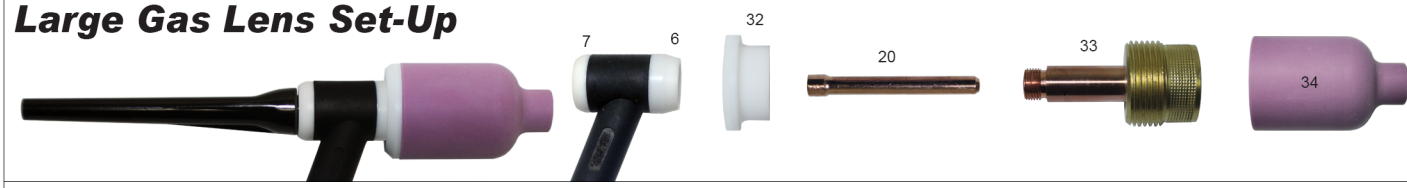

Stubby Collet Body Set-Up

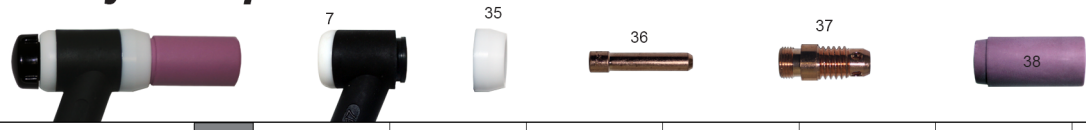

Electrode Diameter		.020" (0.5mm)	.040" (1.0mm)	1/16" (1.6mm)	3/32" (2.4mm)	1/8" (3.2mm)	5/32" (4.0mm)	
Nozzle Size	#	#4 (1/4")	#5 (5/16")	#6 (3/8")	#7 (7/16")	#8 (1/2")	#10 (5/8")	#12 (3/4")
Standard Set-Up								
Gasket Insulator	6	18CG	18CG	18CG	18CG	18CG	18CG	
Collet	20	10N21	10N22	10N23	10N24	10N25	54N20	
Collet Body	21	10N29	10N30	10N31	10N32	10N28	406488	
Alumina Nozzle	22	10N50	10N49	10N48	10N47	10N46	10N45	10N44
Alumina Nozzle Long	23	10N50L	10N49L	10N48L	10N47L			
Medium Gas Lens Set-Up								
Gasket Insulator	28	54N01	54N01	54N01	54N01	54N01	54N01	
Gas Lens	29	45V29	45V24	45V25	45V26	45V27	45V28	
Alumina Nozzle, Gas Lens	30	54N18	54N17	54N16	54N15	54N14	54N19	
Alumina Nozzle Long, Gas Lens	31		54N17L	54N16L	54N15L	54N14L		
Large Stubby Gas Lens Set-Up								
Gasket Insulator	32	54N63	54N63	54N63	54N63	54N63	54N63	
Lg. Gas Lens	33	45V0204	45V0204	45V116	45V64	995795	45V63	53N87 (#12)
Alumina Nozzle, Lg. Gas Lens	34			57N75		57N74	53N88	53N89 (#15)
Alumina Nozzle Long, Lg. Gas Lens				57N75L		57N74L	53N88L	53N87L
Alumina Nozzle Extra Long, Lg. Gas Lens				57N75XL		57N74XL	53N88XL	53N87XL
Stubby Collet Body Set-Up								
Gasket Insulator	35	18CG20	18CG20	18CG20	18CG20	18CG20		
Stubby Collet	36	10N21S	10N22S	10N23S	10N24S	10N25S		
Stubby Collet Body	37	17CB20	17CB20	17CB20	17CB20	17CB20		
Alumina Nozzle	38	13N08	13N09	13N10	13N11	13N12	13N13	

COPYRIGHT © 2025 CM INDUSTRIES, INC. ALL RIGHTS RESERVED

20 Series TIG Torch

250 AMP Water-Cooled

#	Part #	Description
1	20	Torch Body
	20HP	Torch Body, Hard Plastic
2	20V	Torch Body, w/ Valve
3	20F	Torch Body, Flex Head
4	20FV	Torch Body, Flex w/ Valve
5	20P	Torch Body, Pencil
6	598882	Gasket/Insulator
7	41V24	Back Cap, Long
8	41V35	Back Cap, Medium
9	41V33	Back Cap, Short
10	98W77	O-Ring, Back Cap
11	VS-2	Valve Stem
12	CC-3-10	Cable Cover, 3”x10’
	CC-3-22	Cable Cover, 3”x22’
13	53N04	Hose Clamp
14	45V03R	Power Cable, 12.5’ Rubber
	45V04R	Power Cable, 25’ Rubber
15	45V07R	Water Hose, 12.5’ Rubber
	45V08R	Water Hose, 25’ Rubber
16	45V09R	Gas Hose, 12.5’ Rubber
	45V10R	Gas Hose, 25’ Rubber
17	45V03	Power Cable, 12.5’ Vinyl
	45V04	Power Cable, 25’ Vinyl
18	45V07	Water Hose, 12.5’ Vinyl
	45V08	Water Hose, 25’ Vinyl
19	45V09	Gas Hose, 12.5’ Vinyl
	45V10	Gas Hose, 25’ Vinyl
20	See Chart	Collet
21	See Chart	Collet Body
22	See Chart	Nozzle
23	See Chart	Nozzle
24	See Chart	Nozzle
25	H-100	Handle, Textured
	53N06	Handle, Textured Thread-On
26	H-100R	Handle, Ribbed
	53N06R	Handle, Ribbed Thread-On
27	BS-1	Boot Switch, Rubber
28	DA-1820L	Dinse 50mm, w/ 18” Water Hose
29	45V11	Power Cable Adapter



20 Series Torch Packages, 250 Amp

Part #	Description
20	Torch Body, 250 Amp
20-12	Torch Pkg. 250 Amp 12.5', Vinyl
20-12-R	Torch Pkg. 250 Amp 12.5', Rubber
20-25	Torch Pkg. 250 Amp 25', Vinyl
20-25-R	Torch Pkg. 250 Amp 25', Rubber
20F	Torch Body, 250 Amp Flex-Head
20F-12	Torch Pkg. 250 Amp 12.5', Flex-Head, Vinyl
20F-12-R	Torch Pkg. 250 Amp 12.5', Flex-Head, Rubber
20F-25	Torch Pkg. 250 Amp 25', Flex-Head, Vinyl
20F-25-R	Torch Pkg. 250 Amp 25', Flex-Head, Rubber
20FV	Torch Body, 250 Amp Flex-Head w/ Valve
20FV-12	Torch Pkg. 250 Amp 12.5', Flex-Head w/ Valve, Vinyl
20FV-12-R	Torch Pkg. 250 Amp 12.5', Flex-Head w/ Valve, Rubber
20FV-25	Torch Pkg. 250 Amp 25', Flex-Head w/ Valve, Vinyl
20FV-25-R	Torch Pkg. 250 Amp 25', Flex-Head w/ Valve, Rubber

Part #	Description
20P	Torch Body, 250 Amp Pencil 180°
20P-12	Torch Pkg. 250 Amp 12.5', 180°, Vinyl
20P-12-R	Torch Pkg. 250 Amp 12.5', 180°, Rubber
20P-25	Torch Pkg. 250 Amp 25', 180°, Vinyl
20P-25-R	Torch Pkg. 250 Amp 25', 180°, Rubber
20V	Torch Body, 250 Amp w/ Valve
20V-12	Torch Pkg. 250 Amp 12.5', w/ Valve, Vinyl
20V-12-R	Torch Pkg. 250 Amp 12.5', w/ Valve, Rubber
20V-25	Torch Pkg. 250 Amp 25', w/ Valve, Vinyl
20V-25-R	Torch Pkg. 250 Amp 25', w/ Valve, Rubber

COPYRIGHT © 2025 CM INDUSTRIES, INC. ALL RIGHTS RESERVED

CM INDUSTRIES INC.

Standard Set-Up



Optional Nozzles



Small Gas Lens Set-Up



Large Stubby Gas Lens Set-Up

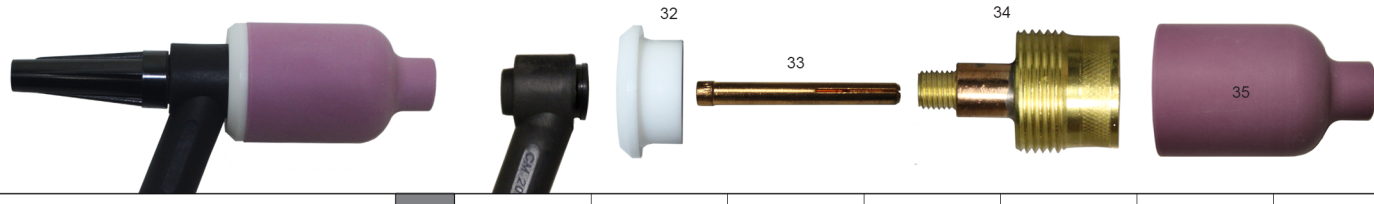

Electrode Diameter			.020" (0.5mm)	.040" (1.0mm)	1/16" (1.6mm)	3/32" (2.4mm)	1/8" (3.2mm)	5/32" (4.0mm)
Nozzle Size	#	#3 (3/16")	#4 (1/4")	#5 (5/16")	#6 (3/8")	#7 (7/16")	#8 (1/2")	#10 (5/8")
Standard Set-Up								
Gasket Insulator	6		598882	598882	598882	598882	598882	
Collet	20		13N20	13N21	13N22	13N23	13N24	
Collet Body	21		13N25	13N26	13N27	13N28	13N29	
Alumina Nozzle	22		13N08	13N09	13N10	13N11	13N12	13N13
Alumina Nozzle Long	23	A796F70	A796F71	A796F72	A796F73			
Alumina Nozzle Extra Long	24	A796F74	A796F75	A796F76	A796F77			
Small Gas Lens Set-Up								
Gasket Insulator	6		598882	598882	598882	598882	598882	
Gas Lens	30		45V41	45V42	45V43	45V44	45V45	
Alumina Nozzle, Gas Lens	31		53N58	53N59	53N60	53N61	53N61S	
Large Stubby Gas Lens Set-Up								
Gasket Insulator	32		54N63-20	54N63-20	54N63-20	54N63-20	54N63-20	
Collet, Lg. Gas Lens	33		13N20L	13N21L	13N22L	13N23L	13N24L	
Lg. Gas Lens	34		45V0204S	45V0204S	45V116S	45V64S	995795S	
Alumina Nozzle, Lg. Gas Lens	35				57N75		57N74	53N88
							#12 (3/4")	53N87
							#15 (15/16")	53N89

COPYRIGHT © 2025 CM INDUSTRIES, INC. ALL RIGHTS RESERVED

22 Series TIG Torch

250 AMP Water-Cooled

#	Part #	Description
1	22A	Torch Body, 7”
1a	22-8A	Barrel, 7”
2	22B	Torch Body, 3“
2a	22-8B	Barrel, 3”
3	22-9	Insulating Boot
4	22-10	Gasket/Insulator
5	22-7	Collet Knob
6	CC-3-10	Cable Cover, 3”x10’
	CC-3-22	Cable Cover, 3”x22’
	CC-4-10	Cable Cover, 4”x10’
	CC-4-22	Cable Cover, 4”x22’
7	45V03R-3	Power Cable, 3’ Rubber
	45V03R-6	Power Cable, 6’ Rubber
	45V03R	Power Cable, 12.5’ Rubber
	45V04R	Power Cable, 25’ Rubber
8	45V07R-3	Water Hose, 3’ Rubber
	45V07R-6	Water Hose, 6’ Rubber
	45V07R	Water Hose, 12.5’ Rubber
	45V08R	Water Hose, 25’ Rubber
9	45V09R-3	Gas Hose, 3’ Rubber
	45V09R-6	Gas Hose, 6’ Rubber
	45V09R	Gas Hose, 12.5’ Rubber
	45V10R	Gas Hose, 25’ Rubber
10	See Chart	Collet
11	See Chart	Collet
12	See Chart	Collet Body
13	See Chart	Gas Lens Collet Body
14	See Chart	Nozzle
15	See Chart	Nozzle
16	See Chart	Nozzle, Long
17	See Chart	Nozzle, Extra Long
18	DA-1820L	Dinse 50mm, w/ 18” Water Hose
19	45V11	Power Cable Adapter



22 Series Torch Packages, 250 Amp

Part #	Description
22A	Machine Torch 7”, 250 Amp
22A-3	Torch Pkg. 250 Amp 3’ Rubber, 180° 7” Body
22A-6	Torch Pkg. 250 Amp 6’ Rubber, 180° 7” Body
22A-12	Torch Pkg. 250 Amp 12.5’ Rubber, 180° 7” Body
22A-25	Torch Pkg. 250 Amp 25’ Rubber, 180° 7” Body

Part #	Description
22B	Machine Torch 3“, 250 Amp
22B-3	Torch Pkg. 250 Amp 3’ Rubber, 180° 3” Body
22B-6	Torch Pkg. 250 Amp 6’ Rubber, 180° 3” Body
22B-12	Torch Pkg. 250 Amp 12.5’ Rubber, 180° 3” Body
22B-25	Torch Pkg. 250 Amp 25’ Rubber, 180° 3” Body

COPYRIGHT © 2025 CM INDUSTRIES, INC. ALL RIGHTS RESERVED

CM INDUSTRIES® INC.

Standard Set-Up

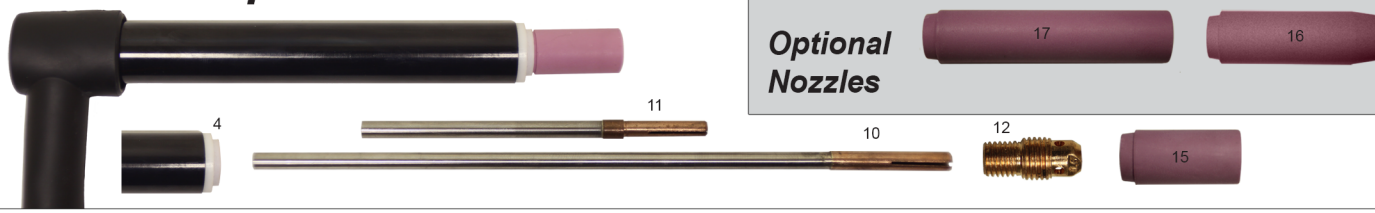

Optional Nozzles

Small Gas Lens Set-Up

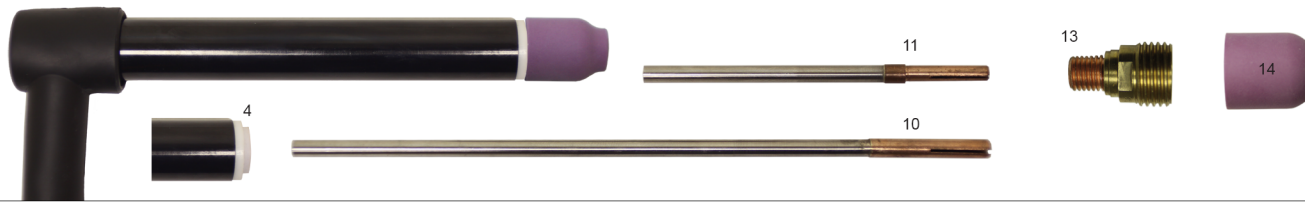

Large Stubby Gas Lens Set-Up

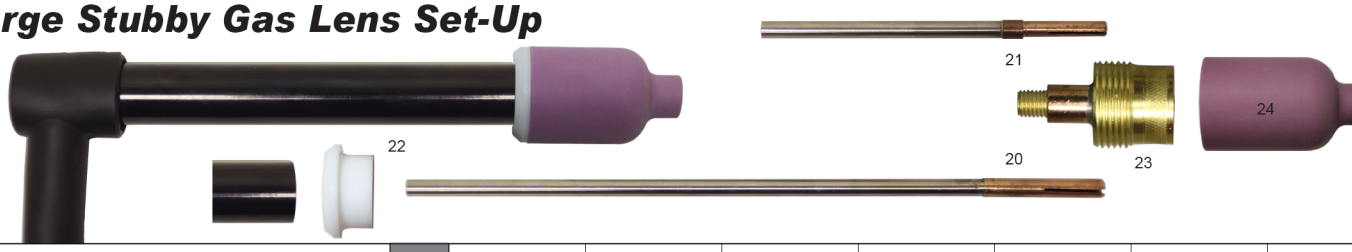

Electrode Diameter			.020" (0.5mm)	.040" (1.0mm)	1/16" (1.6mm)	3/32" (2.4mm)	1/8" (3.2mm)	5/32" (4.0mm)
Nozzle Size	#	#3 (3/16")	#4 (1/4")	#5 (5/16")	#6 (3/8")	#7 (7/16")	#8 (1/2")	#10 (5/8")
Standard Set-Up								
Collet 22A	10			22N21A	22N22A	22N23A	22N24A	
Collet 22B	11			22N21B	22N22B	22N23B	22N24B	
Collet Body	12		13N25	13N26	13N27	13N28	13N29	
Alumina Nozzle	15		13N08	13N09	13N10	13N11	13N12	13N13
Alumina Nozzle Long	16	A796F70	A796F71	A796F72	A796F73			
Alumina Nozzle Extra Long	17	A796F74	A796F75	A796F76	A796F77			
Small Gas Lens Set-Up								
Collet 22A	10			22N21A	22N22A	22N23A	22N24A	
Collet 22B	11			22N21B	22N22B	22N23B	22N24B	
Gas Lens	13			45V42	45V43	45V44	45V45	
Alumina Nozzle, Gas Lens	14		53N58	53N59	53N60	53N61	53N61S	
Large Stubby Gas Lens Set-Up								
Collet 22A, Lg. Gas Lens	20			22N21AL	22N22AL	22N23AL	22N24AL	
Collet 22B, Lg. Gas Lens	21			22N21BL	22N22BL	22N23BL	22N24BL	
Gasket Insulator	22			54N63-22	54N63-22	54N63-22	54N63-22	
Lg. Gas Lens	23			45V0204S	45V116S	45V64S	995795S	
Alumina Nozzle, Lg. Gas Lens	24				57N75		57N74	53N88
							53N87 (#12)	53N89 (#15)

COPYRIGHT © 2025 CM INDUSTRIES, INC. ALL RIGHTS RESERVED

24 Series TIG Torch

80 AMP Air-Cooled
180 AMP Water-Cooled

#	Part #	Description
1	24	Torch Body, Air-Cooled 60°
2	24N	Torch Body, Air-Cooled 90°
4	24W	Torch Body, Water-Cooled 60°
5	24W-90D	Torch Body, Water-Cooled 90°
6	53N22	Gasket/Insulator
8	53N04	Hose Clamp
9	CC-3-10	Cable Cover, 3”x10’
	CC-3-22	Cable Cover, 3”x22’
	Model 24	
10	56Y38R	Power Cable, 12.5’ Rubber
	56Y97R	Power Cable, 25’ Rubber
	Model 24W	
11	45V03R	Power Cable, 12.5’ Rubber
	45V04R	Power Cable, 25’ Rubber
12	45V07R	Water Hose, 12.5’ Rubber
	45V08R	Water Hose, 25’ Rubber
13	45V09R	Gas Hose, 12.5’ Rubber
	45V10R	Gas Hose, 25’ Rubber
14	45V03	Power Cable, 12.5’ Vinyl
	45V04	Power Cable, 25’ Vinyl
15	45V07	Water Hose, 12.5’ Vinyl
	45V08	Water Hose, 25’ Vinyl
16	45V09	Gas Hose, 12.5’ Vinyl
	45V10	Gas Hose, 25’ Vinyl
17	See Chart	Collet
18	See Chart	Collet Body
19	See Chart	Nozzle
20	See Chart	Nozzle
21	H-100R	Handle, Ribbed
22	H-100	Handle, Textured
23	DI-24F	Dinse 50mm, In-Line Gas Hole
24	DA-1820L	Dinse 50mm, w/ 18” Water Hose
25	53N43	Power Cable Adapter
26	45V11	Power Cable Adapter



24 Series Torch Packages, 80-180 Amp

Part #	Description
24	Torch Body, 80 Amp 60°, Air-Cooled
24-12-R	Torch Pkg. 80 Amp 60°, 12.5', Rubber
24-25-R	Torch Pkg. 80 Amp 60°, 25', Rubber
24N	Torch Body, 80 Amp 90°, Air-Cooled
24N-12-R	Torch Pkg. 80 Amp 90°, 12.5', Rubber
24N-25-R	Torch Pkg. 80 Amp 90°, 25', Rubber

Part #	Description
24W	Torch Body, 180 Amp 60°, Water-Cooled
24W-12	Torch Pkg. 180 Amp 60°, 12.5', Vinyl
24W-12-R	Torch Pkg. 180 Amp 60°, 12.5', Rubber
24W-25	Torch Pkg. 180 Amp 60°, 25', Vinyl
24W-25-R	Torch Pkg. 180 Amp 60°, 25', Rubber
24WN	Torch Body, 180 Amp 90°, Water-Cooled
24WN-12	Torch Pkg. 180 Amp 90°, 12.5', Vinyl
24WN-12-R	Torch Pkg. 180 Amp 90°, 12.5', Rubber
24WN-25	Torch Pkg. 180 Amp 90°, 25', Vinyl
24WN-25-R	Torch Pkg. 180 Amp 90°, 25', Rubber

COPYRIGHT © 2025 CM INDUSTRIES, INC. ALL RIGHTS RESERVED

Standard Set-Up

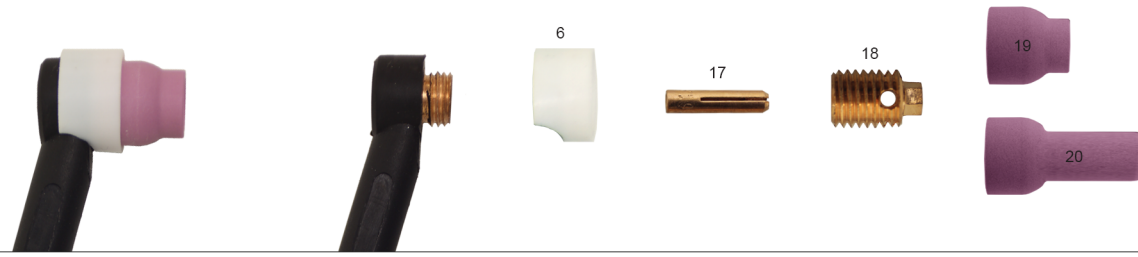

Small Gas Lens Set-Up

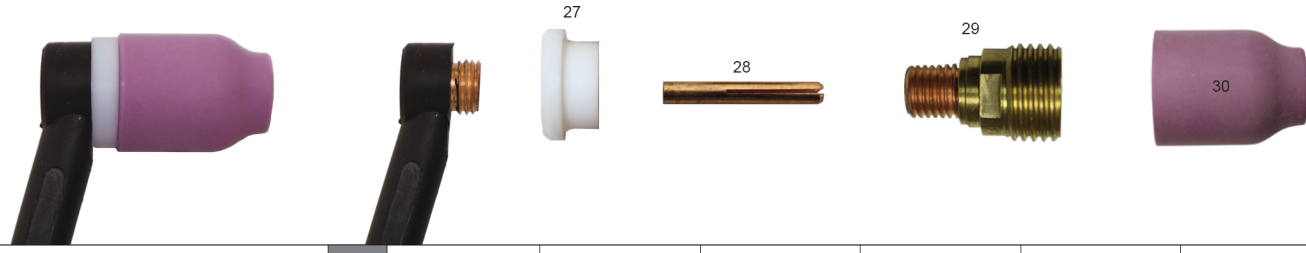

Electrode Diameter Nozzle Size	#	#3 (3/16”)	.020” (0.5mm) #4 (1/4”)	.040” (1.0mm) #5 (5/16”)	1/16” (1.6mm) #6 (3/8”)	3/32” (2.4mm) #7 (7/16”)	1/8” (3.2mm) #8 (1/2”)
Standard Set-Up							
Collet	17		53N15	53N16	53N14	24C332	
Collet Body	18		53N17	53N18	53N19	24CB332	
Alumina Nozzle	19	53N23A	53N24A	53N25A	53N27A		
Alumina Nozzle Long	20		53N28A		53N26A		
Small Gas Lens Set-Up							
Gasket Insulator	27		53N66	53N66	53N66	53N66	53N66
Collet, Gas Lens	28		53N62	53N63	53N64	24GLC332	
Gas Lens	29		45V41	45V42	45V43	45V44	
Alumina Nozzle, Gas Lens	30		53N58	53N59	53N60	53N61	53N61S

COPYRIGHT © 2025 CM INDUSTRIES, INC. ALL RIGHTS RESERVED

26 Series TIG Torch

200 AMP Air-Cooled

#	Part #	Description
1	26	Torch Body
2	26V	Torch Body, w/ Valve
3	26F	Torch Body, Flex Head
4	26FV	Torch Body, Flex w/ Valve
5	18CG	Gasket/Insulator
6	18-7	Back Insulator
7	57Y02	Back Cap, Long
8	300M	Back Cap, Medium
9	57Y04	Back Cap, Short
10	98W18	O-Ring, Back Cap
11	VS-1	Valve Stem
12	CC-4-10	Cable Cover, 4”x10’
	CC-4-22	Cable Cover, 4”x22’
13	46V28-2	Power Cable, 12.5’ 2 pc
	46V30-2	Power Cable, 25’ 2 pc
14	46V28R	Power Cable, 12.5’ Rubber
	46V30R	Power Cable, 25’ Rubber
15	See Chart	Collet
16	See Chart	Collet Body
17	See Chart	Nozzle
18	See Chart	Nozzle
19	H-200	Handle, Textured
20	H-200R	Handle, Ribbed
21	DA-26R	Dinse 50mm, w/ 18” Gas Hose
22	DI-26F	Dinse 50mm, w/ In-Line Gas Hole*
	DI-26R	Dinse 50mm, w/In-Line Gas - Std.
23	45V62	Power Cable Adapter



*Special Power Cable Required

26 Series Torch Packages, 200 Amp

Part #	Description
26	Torch Body, 200 Amp
26-12-2	Torch Pkg. 200 Amp 12.5', 2 Pc.
26-12-R	Torch Pkg. 200 Amp12.5', Rubber
26-25-2	Torch Pkg. 200 Amp 25', 2 Pc.
26-25-R	Torch Pkg. 200 Amp 25', Rubber
26F	Torch Body, 200 Amp Flex-Head
26F-12-2	Torch Pkg. 200 Amp 12.5', Flex-Head, 2 Pc.
26F-12-R	Torch Pkg. 200 Amp 12.5', Flex-Head, Rubber
26F-25-2	Torch Pkg. 200 Amp 25', Flex-Head, 2 Pc.
26F-25-R	Torch Pkg. 200 Amp 25', Flex-Head, Rubber
26FV	Torch Body, 200 Amp Flex-Head w/ Valve
26FV-12-2	Torch Pkg. 200 Amp 12.5', Flex-Head w/ Valve, 2 Pc.
26FV-12-R	Torch Pkg. 200 Amp 12.5', Flex-Head w/ Valve, Rubber
26FV-25-2	Torch Pkg. 200 Amp 25', Flex-Head w/ Valve, 2 Pc.
26FV-25-R	Torch Pkg. 200 Amp 25', Flex-Head w/ Valve, Rubber

Part #	Description
26V	Torch Body, 200 Amp w/ Valve
26V-12-2	Torch Pkg. 200 Amp 12.5', w/ Valve, 2 Pc.
26V-12-R	Torch Pkg. 200 Amp 12.5', w/ Valve, Rubber
26V-25-2	Torch Pkg. 200 Amp 25', w/ Valve, 2 Pc.
26V-25-R	Torch Pkg. 200 Amp 25', w/ Valve, Rubber

COPYRIGHT © 2025 CM INDUSTRIES, INC. ALL RIGHTS RESERVED

CM INDUSTRIES® INC.

Standard Set-Up



Medium Gas Lens Set-Up

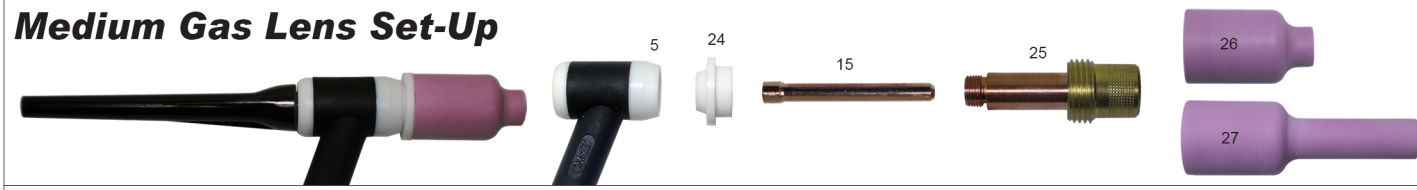

Large Gas Lens Set-Up

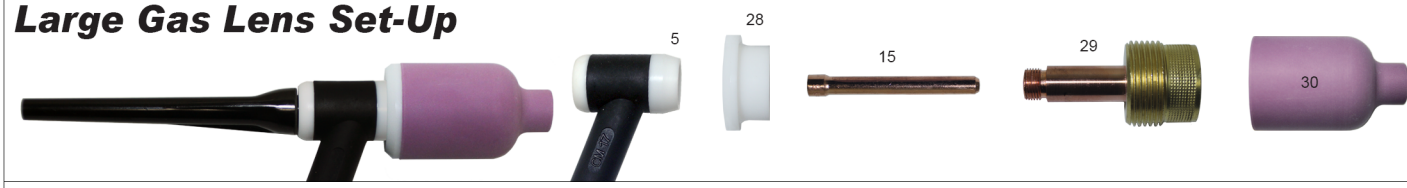

Stubby Collet Body Set-Up

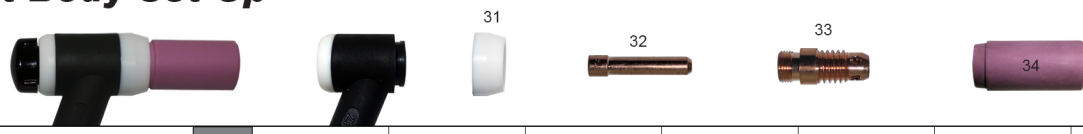

Electrode Diameter		.020" (0.5mm)	.040" (1.0mm)	1/16" (1.6mm)	3/32" (2.4mm)	1/8" (3.2mm)	5/32" (4.0mm)	
Nozzle Size	#	#4 (1/4")	#5 (5/16")	#6 (3/8")	#7 (7/16")	#8 (1/2")	#10 (5/8")	#12 (3/4")
Standard Set-Up								
Gasket Insulator	5	18CG	18CG	18CG	18CG	18CG	18CG	
Collet	15	10N21	10N22	10N23	10N24	10N25	54N20	
Collet Body	16	10N29	10N30	10N31	10N32	10N28	406488	
Alumina Nozzle	17	10N50	10N49	10N48	10N47	10N46	10N45	10N44
Alumina Nozzle Long	18		10N49L	10N48L	10N47L			
Medium Gas Lens Set-Up								
Gasket Insulator	24	54N01	54N01	54N01	54N01	54N01	54N01	
Gas Lens	25	45V29	45V24	45V25	45V26	45V27	45V28	
Alumina Nozzle, Gas Lens	26	54N18	54N17	54N16	54N15	54N14	54N19	
Alumina Nozzle Long, Gas Lens	27		54N17L	54N16L	54N15L	54N14L		
Large Stubby Gas Lens Set-Up								
Gasket Insulator	28	54N63	54N63	54N63	54N63	54N63	54N63	
Lg. Gas Lens	29	45V0204	45V0204	45V116	45V64	995795	45V63	53N87 (#12)
Alumina Nozzle, Lg. Gas Lens	30			57N75		57N74	53N88	53N89 (#15)
Alumina Nozzle Long, Lg. Gas Lens				57N75L		57N74L	53N88L	53N87L
Alumina Nozzle Extra Long, Lg. Gas Lens				57N75XL		57N74XL	53N88XL	53N87XL
Stubby Collet Body Set-Up								
Gasket Insulator	31	18CG20	18CG20	18CG20	18CG20	18CG20		
Stubby Collet	32	10N21S	10N22S	10N23S	10N24S	10N25S		
Stubby Collet Body	33	17CB20	17CB20	17CB20	17CB20	17CB20		
Alumina Nozzle	34	13N08	13N09	13N10	13N11	13N12	13N13	

COPYRIGHT © 2025 CM INDUSTRIES, INC. ALL RIGHTS RESERVED

12 Series TIG Torch

500 AMP Water-Cooled

#	Part #	Description
1	12	Torch Body
2	12NG	Gasket/Insulator
3	12GLG	Gasket/Insulator, for Gas Lens
4	56Y44	Back Cap, Long
5	56Y45	Back Cap, Short
6	40V84R	Power Cable, 12.5’ Rubber
	40V84RL	Power Cable, 25’ Rubber
7	40V83R	Water Hose, 12.5’ Rubber
	40V83RL	Water Hose, 25’ Rubber
8	40V82R	Gas Hose, 12.5’ Rubber
	40V82RL	Gas Hose, 25’ Rubber
9	See Chart	Collet
10	See Chart	Collet Body
11	See Chart	Nozzle
12	See Chart	Gas Lens Collet Body
13	See Chart	Nozzle
14	85WP13	Handle
15	CC-4-10	Cable Cover, 4”x10’
	CC-4-22	Cable Cover, 4”x22’
16	45V11	Power Cable Adapter



12 Series Torch Packages, 500 Amp

Part #	Description
12	Torch Body, 500 Amp
12-12	Torch Pkg. 500 Amp 12.5', Rubber

Part #	Description
12	Torch Body, 500 Amp
12-25	Torch Pkg. 500 Amp 25', Rubber

Electrode Diameter		1/16” (1.6mm)	3/32” (2.4mm)	1/8” (3.2mm)	5/32” (4.0mm)	3/16” (4.8mm)	1/4” (6.4mm)
Nozzle Size	#	#4 (1/4”)	#5 (5/16”)	#6 (3/8”)	#7 (7/16”)	#8 (1/2”)	#10 (5/8”)
Standard Set-Up							#12 (3/4”)
Collet	9	85Z14	85Z15	85Z16	85Z17	85Z18	85Z19
Collet Body	10	11WP65	11WP65	11WP65	11WP65	11WP65	11WP65
Nozzle	11	14N57	14N58	14N59	14N60	14N61	14N61-10
Gas Lens Set-Up							14N61-12
Gas Lens	12	11GL16	11GL32	11GL18	11GL53	11GL36	
Alumina Nozzle	13			57N75		57N74	53N88 (#10)
Alumina Nozzle Long				57N75L		57N74L	53N87 (#12)
Alumina Nozzle Extra Long				57N75XL		57N74XL	53N89 (#15)

COPYRIGHT © 2025 CM INDUSTRIES, INC. ALL RIGHTS RESERVED

25 Series TIG Torch

200 AMP Water-Cooled

#	Part #	Description
1	25	Torch Body, Flex Pencil 180°
2	598882	Gasket/Insulator
3	53N06	Handle, Textured
4	53N06R	Handle, Ribbed
5	45V03R	Power Cable, 12.5’ Rubber
	45V04R	Power Cable, 25’ Rubber
6	45V07R	Water Hose, 12.5’ Rubber
	45V08R	Water Hose, 25’ Rubber
7	45V09R	Gas Hose, 12.5’ Rubber
	45V10R	Gas Hose, 25’ Rubber
8	45V03	Power Cable, 12.5’ Vinyl
	45V04	Power Cable, 25’ Vinyl
9	45V07	Water Hose, 12.5’ Vinyl
	45V08	Water Hose, 25’ Vinyl
10	45V09	Gas Hose, 12.5’ Vinyl
	45V10	Gas Hose, 25’ Vinyl
11	CC-3-10	Cable Cover, 3”x10’
	CC-3-22	Cable Cover, 3”x22’
12	53N04	
13	See Chart	Collet
14	See Chart	Collet Body
15	See Chart	Nozzle
16	See Chart	Nozzle
17	See Chart	Nozzle
18	DA-1820L	Dinse 50mm, w/ 18” Water Hose
19	45V11	Power Cable Adapter



25 Series Torch Packages, 200 Amp

Part #	Description
25	Torch Body, 200 Amp Flex Pencil 180°
25-12	Torch Pkg. 200 Amp 12.5' Flex Pencil 180°, Vinyl
25-12-R	Torch Pkg. 200 Amp12.5' Flex Pencil 180°, Rubber

Part #	Description
25	Torch Body, 200 Amp Flex Pencil 180°
25-25	Torch Pkg. 200 Amp 25' Flex Pencil 180°, Vinyl
25-25-R	Torch Pkg. 200 Amp 25' Flex Pencil 180°, Rubber

Electrode Diameter			.020” (0.5mm)	.040” (1.0mm)	1/16” (1.6mm)	3/32” (2.4mm)	1/8” (3.2mm)	5/32” (4.0mm)
Nozzle Size	#	#3 (3/16”)	#4 (1/4”)	#5 (5/16”)	#6 (3/8”)	#7 (7/16”)	#8 (1/2”)	#10 (5/8”)
Collet	13		13N20	13N21	13N22	13N23	13N24	
Collet Body	14		13N25	13N26	13N27	13N28	13N29	
Alumina Nozzle	15		13N08	13N09	13N10	13N11	13N12	13N13
Alumina Nozzle Long	16	A796F70	A796F71	A796F72	A796F73			
Alumina Nozzle Extra Long	17	A796F74	A796F75	A796F76	A796F77			

COPYRIGHT © 2025 CM INDUSTRIES, INC. ALL RIGHTS RESERVED

27 Series TIG Torch

500 AMP Water-Cooled

#	Part #	Description
1	27A	Machine Torch Body, 9”
2	27B	Machine Torch Body, 20”
3	27-10A	Barrel Body, 9”
4	27-10B	Barrel Body, 20”
5	27-19	Nylon Screw
6	27-13A	Shaft Assembly (27A)
	27-13B	Shaft Assembly (27B)
7	27-13-2	O-Ring (outer)
8	27-13-3	O-Ring (inner)
9	27-12	Insulating Boot
10	See Chart	Collet
11	See Chart	Gas Lens Collet Body
12	181W89	O-Ring, Gas Lens Collet Body
13	57N56	Gasket
14	See Chart	Nozzle
15	40V84R-3	Power Cable, 3’ Rubber
	40V84R	Power Cable, 12.5’ Rubber
	40V84RL	Power Cable, 25’ Rubber
16	40V83R-3	Water Hose, 3’ Rubber
	40V83R	Water Hose, 12.5’ Rubber
	40V83RL	Water Hose, 25’ Rubber
17	40V82R-3	Gas Hose, 3’ Rubber
	40V82R	Gas Hose, 12.5’ Rubber
	40V82RL	Gas Hose, 25’ Rubber
18	CC-4-10	Cable Cover, 4”x10’
	CC-4-22	Cable Cover, 4”x22’
19	45V11	Power Cable Adapter



27 Series Torch Packages, 500 Amp

Part #	Description
27A	Machine Torch 9”, 500 Amp
27A-3	Torch Pkg. 500 Amp 3’ Rubber, 180° 9” Body
27A-12	Torch Pkg. 500 Amp 12.5’ Rubber, 180° 9” Body
27A-25	Torch Pkg. 500 Amp 25’ Rubber, 180° 9” Body

Part #	Description
27B	Machine Torch 20”, 500 Amp
27B-3	Torch Pkg. 500 Amp 3’ Rubber, 180° 20” Body
27B-12	Torch Pkg. 500 Amp 12.5’ Rubber, 180° 20” Body
27B-25	Torch Pkg. 500 Amp 25’ Rubber, 180° 20” Body

Electrode Diameter		.040” (1.0mm)	1/16” (1.6mm)	3/32” (2.4mm)	1/8” (3.2mm)	.5/32” (4.0mm)	3/16” (4.8mm)	1/4” (6.4mm)
Nozzle Size	#	#5 (5/16”)	#6 (3/8”)	#7 (7/16”)	#8 (1/2”)	#10 (5/8”)	#12 (3/4”)	#15 (15/16”)
Standard Set-Up								
Collet	10	57N45	57N46	57N47	57N48	57N49	57N50	57N51
Gas Lens	11	49V22	49V23	49V24	49V25	49V26	49V27	49V28
Alumina Nozzle	14		57N75		57N74	53N88	53N87	53N89
Alumina Nozzle Long			57N75L		57N74L	53N88L	53N87L	
Alumina Nozzle Extra Long			57N75XL		57N74XL	53N88XL	53N87XL	
Alumina Nozzle Extra Extra Long			57N75XXL		57N74XXL	53N88XXL	53N87XXL	

COPYRIGHT © 2025 CM INDUSTRIES, INC. ALL RIGHTS RESERVED

Water Coolers



COPYRIGHT © 2025 CM INDUSTRIES, INC. ALL RIGHTS RESERVED

Water Coolers

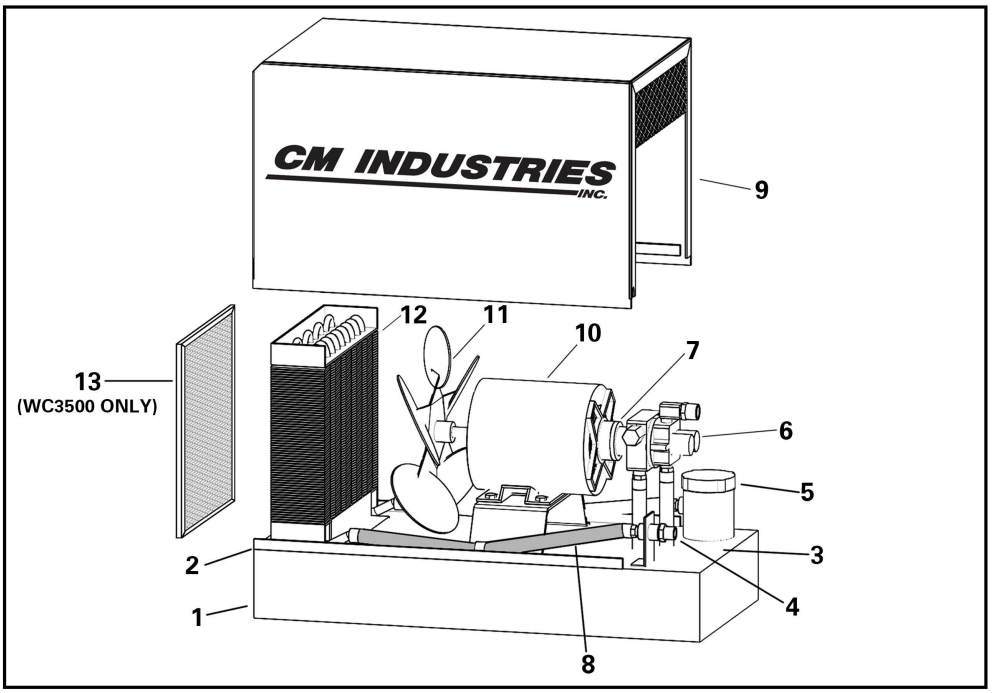

MODEL	PART#	GALLONS	LITERS	VOLTS	AMPS	HZ	BTU/HOURS
WC2500	680-25-100	2	7.6	115	5.0	50/60	12,000
WC2500	680-25-102	2	7.6	230	2.5	50/60	12,000
WC3500	690-25-100	3	11.4	115	5.0	50/60	15,000
WC3500	690-25-102	3	11.4	230	2.5	50/60	15,000

WC2500 - 2 GL
STAINLESS STEEL WATER COOLER

Specifications

Dimensions:
18" Long x 9 1/4" Wide x 12 3/8" High
(45.8 cm x 23.5 cm x 31.4 cm)

Pump Capacity:
100 psi max. 1.5 gpm (5.68 ipm) @ 50 psi.
1.8 gpm (6.81 lpm) @ 60 psi.

Heat Exchanger:
High Efficiency, Copper Core, Rustproof, 12,000 BTU

Water Connections:
5/8"-18 UNC Left-Handed Inert Gas Fittings

Net Weight:
40 lbs. (18.2 kg)

#	PART #	DESCRIPTION
1	680-30-020	Tank
2	680-30-021	Tank Gasket
3	680-30-022	Tank Cover Plate
4	680-30-023	Inert Gas Adapter
5	680-30-024	Sight Glass Assembly
6	680-30-067	Pump, Rotary Vane
6a	680-30-069	Pump Screen
7	680-30-068	Clamp, Pump to Motor
8	680-30-025	Rubber Hose
9	680-35-026	Hood
10	680-30-061	Motor 115/230V 50/60Hz
11	680-30-027	Fan, 8"
12	680-30-028	Radiator

WC3500 - 3 GL
STAINLESS STEEL WATER COOLER

Specifications

Dimensions:
23" Long x 11" Wide x 14 3/4" High
(58.4 cm x 27.9 cm x 37.5 cm)

Pump Capacity:
100 psi max. 1.5 gpm (5.68 ipm) @ 50 psi.
1.8 gpm (6.81 lpm) @ 60 psi.

Heat Exchanger:
High Efficiency, Copper Core, Rustproof, 15,000 BTU

Water Connections:
5/8"-18 UNC Left-Handed Inert Gas Fittings

Net Weight:
43 lbs. (19.5 kg)

#	PART #	DESCRIPTION
1	680-35-020	Tank
2	680-35-021	Tank Gasket
3	680-35-022	Tank Cover Plate
4	680-30-023	Inert Gas Adapter
5	680-30-024	Sight Glass Assembly
6	680-30-067	Pump, Rotary Vane
6a	680-30-069	Pump Screen
7	680-30-068	Clamp, Pump to Motor
8	680-35-025	Rubber Hose
9	680-35-026	Hood
10	680-30-061	Motor 115/230V 50/60Hz
11	680-35-027	Fan, 10"
12	680-35-028	Radiator
13	680-35-029	Radiator Screen

COPYRIGHT © 2025 CM INDUSTRIES, INC. ALL RIGHTS RESERVED

Cooler & Water Hose Extension Kits

xx = Standard lengths of 2-10, 12, 15, 20, 25, 30, 35, and 50 ft. Custom lengths also available.

Male to Quick Disconnect

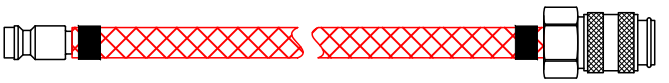

310-62-xx

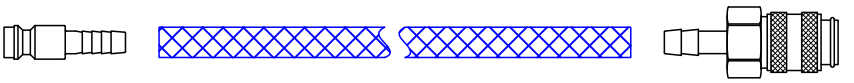

350-52-001

350-65-002

Male to Robotic Quick Disconnect



310-63-xx

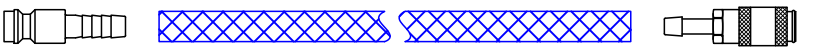

350-52-001

KR512-1

5/8-18 Left-Hand to 5/8-18 Left-Hand

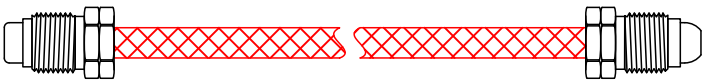

310-64-xx

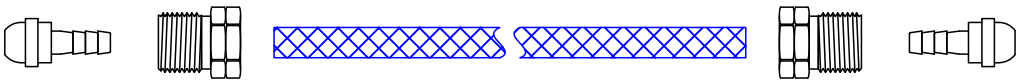

53N10

11N83

11N83

53N10

5/8-18 Left-Hand to Quick Disconnect

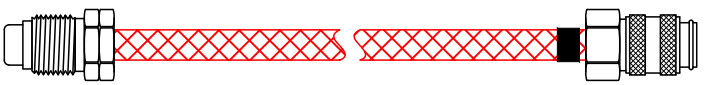

310-65-xx

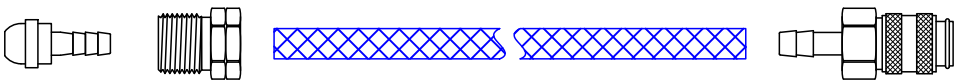

53N10

11N83

350-65-002

COPYRIGHT © 2025 CM INDUSTRIES, INC. ALL RIGHTS RESERVED

NOTES

CM INDUSTRIES INC.

MANUFACTURER OF QUALITY WELDING PRODUCTS



CM INDUSTRIES INC. PRODUCT CATALOG

SCAN TO VIEW

All references to genuine manufacturers' equipment numbers, trade names, or trademarks are provided solely for identification and convenience.
Trademarks, including ® for registered trademarks and TM for trademarks, are the property of their respective owners.

CM INDUSTRIES® INC.

505 Oakwood Road, Suite 120
Lake Zurich, IL 60047 USA

sales@cmindustries.com
Phone: 847-550-0033
cmindustries.com

MADE IN THE USA BY CM INDUSTRIES